# NORTHUMBERLAND HIGH & MIDDLE SCHOOLS
# SANITARY TREATMENT MODIFICATIONS

## NORTHUMBERLAND COUNTY
## HEATHSVILLE, VIRGINIA

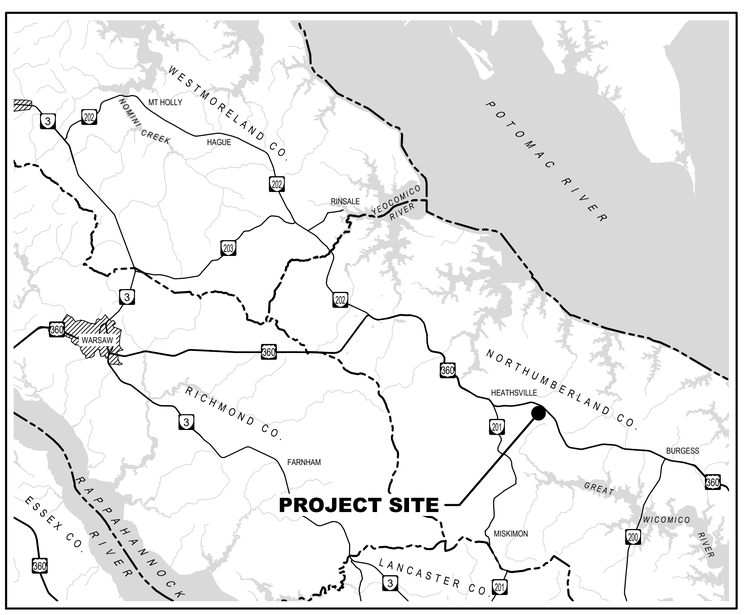


## PROJECT VICINITY MAP
NOT TO SCALE

N

## INDEX OF DRAWINGS


| | |
|---|---|
| G-001 | COVER SHEET |
| C-101 | OVERALL SITE LAYOUT |
| C-102 | E&S |
| C-103 | E&S DETAILS |
| D-001 | PROCESS FLOW DIAGRAM |
| D-002 | GENERAL NOTES |
| D-101 | SEPTIC TANK AND PUMP STATION PLAN |
| D-102 | EQUALIZATION TANK SYSTEM PLAN AND SECTION |
| D-301 | SEPTIC TANK AND PUMP STATION SECTIONS |
| D-501 | DETAILS |
| E-001 | ELECTRICAL NOTES |
| E-101 | ELECTRICAL SITE PLAN |
| E-601 | SINGLE LINE |
| E-602 | CONTROL SCHEMATIC |
| E-603 | I/O SUMMARY |


### RESPONSIBLE LAND DISTURBER DESIGNATION

THE PERSON IDENTIFIED BELOW IS DESIGNATED AS THE RESPONSIBLE LAND DISTURBER WHO WILL BE IN CHARGE OF AND RESPONSIBLE FOR CARRYING OUT THE LAND-DISTURBING ACTIVITY ASSOCIATED WITH THIS PROJECT. THIS PERSON MEETS THE APPLICABLE REQUIREMENTS OF SECTION 62.1-44.15:52 AND 62.1-44.15:55 OF THE CODE OF VIRGINIA BY VIRTUE OF THE FOLLOWING:

____ RESPONSIBLE LAND DISTURBER CERTIFICATE

____ DCR/DEQ CERTIFICATION FOR COMBINED ADMINISTRATOR, PROGRAM ADMINISTRATOR, PLAN REVIEWER, OR INSPECTOR

____ VIRGINIA PROFESSIONAL ENGINEER, LAND SURVEYOR, LANDSCAPE ARCHITECT, OR ARCHITECT

RESPONSIBLE LAND DISTURBER CONTACT INFORMATION:

NAME (SIGNATURE) _____ DATE: _____

NAME (PRINT) _____

CERTIFICATION / REGISTRATION NUMBER _____

COMPANY _____

MAILING ADDRESS _____

_____

TELEPHONE _____ FAX _____

E-MAIL _____

**THIS DESIGNATION MAY ONLY BE CHANGED BY PROVIDING A LETTER WITH DOCUMENTATION IDENTIFYING THE NEW RLD TO THE DEPARTMENT OF PUBLIC WORKS - ENGINEERING FOR VERIFICATION AND APPROVAL**

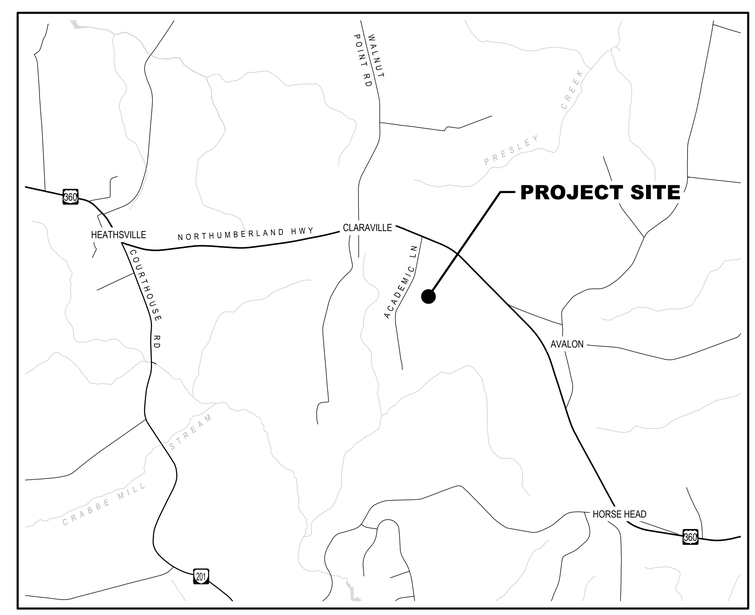


## PROJECT LOCATION MAP
NOT TO SCALE

N


MANGRUM Consulting & Design
1500 Clayton Avenue, Lynchburg VA 24503
434.665.1515 Rob@MangrumConsulting.com


COMMONWEALTH OF VIRGINIA
CARL ROBERT LAWRENCE MANGRUM
Lic. No. 33490
11/22/2023
PROFESSIONAL ENGINEER

NORTHUMBERLAND HIGH & MIDDLE SCHOOLS
SANITARY TREATMENT MODIFICATIONS
OWNER: NORTHUMBERLAND COUNTY HEATHSVILLE, VIRGINIA

| MARK | DATE | DESCRIPTION |
|---|---|---|

| | |
|---|---|
| PROJECT NO: | 2346 |
| DATE: | 11/22/2023 |
| DRAWN BY: | MCT |
| CHECKED BY: | CRLM |

SHEET TITLE

COVER SHEET

G-001

SHEET 1 OF 15

X:\PROJ\TCS\2346_MCD-NORTHUMBERLANDHS\CAD\2346G001.DWG PLOT: 11/21/2023 1:55 PM

1 OVERALL SITE LAYOUT PLAN

SCALE: 1" = 200'

0 200' 400'

N

MANGRUM
Consulting & Design
1500 Clayton Avenue, Lynchburg VA 24503
434.665.1515 Rob@MangrumConsulting.com

COMMONWEALTH OF VIRGINIA
CARL ROBERT LAWRENCE MANGRUM
Lic. No. 33450
11/22/2023
PROFESSIONAL ENGINEER

NORTHUMBERLAND HIGH & MIDDLE SCHOOLS

SANITARY TREATMENT MODIFICATIONS

OWNER:
NORTHUMBERLAND COUNTY
HEATHSVILLE, VIRGINIA

| MARK | DATE | DESCRIPTION |
|---|---|---|

| | |
|---|---|
| PROJECT NO: | 2346 |
| DATE: | 11/22/2023 |
| DRAWN BY: | MCT |
| CHECKED BY: | CRLM |
| SHEET TITLE | |

OVERALL SITE LAYOUT

C-101

SHEET 2 OF 15

X:\PROJ\TCS\2346_MCD-NORTHUMBERLAND\HS\CAD\2346C101.DWG PLOT: 11/21/2023 1:56 PM

## EROSION AND SEDIMENT CONTROL LEGEND

| | | |
|---|---|---|
| SF | SF | SILT FENCE PER VESCH STD. & SPEC 3.05 |
| | CE | CONSTRUCTION ENTRANCE PER VESCH STD. & SPEC 3.02 |
| | PS | PERMANENT SEEDING PER VESCH STD. & SPEC. 3.32 (NOTE: ALL DISTURBED AREAS TO RECEIVE PERMANENT SEEDING) |
| | MU | MULCHING PER VESCH STD. & SPEC 3.35 |

1 E&S PLAN

SCALE: 1" = 200'

0 200' 400'

N

MANGRUM Consulting & Design
1500 Clayton Avenue, Lynchburg VA 24503
434.665.1515 Rob@MangrumConsulting.com

COMMONWEALTH OF VIRGINIA
CARL ROBERT LAWRENCE MANGRUM
Lic. No. 33450
11/22/2023
PROFESSIONAL ENGINEER

NORTHUMBERLAND HIGH & MIDDLE SCHOOLS

SANITARY TREATMENT MODIFICATIONS

OWNER:
NORTHUMBERLAND COUNTY
HEATHSVILLE, VIRGINIA

| MARK | DATE | DESCRIPTION |
|---|---|---|

| | |
|---|---|
| PROJECT NO: | 2346 |
| DATE: | 11/22/2023 |
| DRAWN BY: | MCT |
| CHECKED BY: | CRLM |
| SHEET TITLE | |

E&S

C-102

SHEET 3 OF 15

X:\PROJ\TCS\2346_MCD-NORTHUMBERLANDHS\CAD\2346C102.DWG PLOT: 11/21/2023 1:57 PM

# STONE CONSTRUCTION ENTRANCE

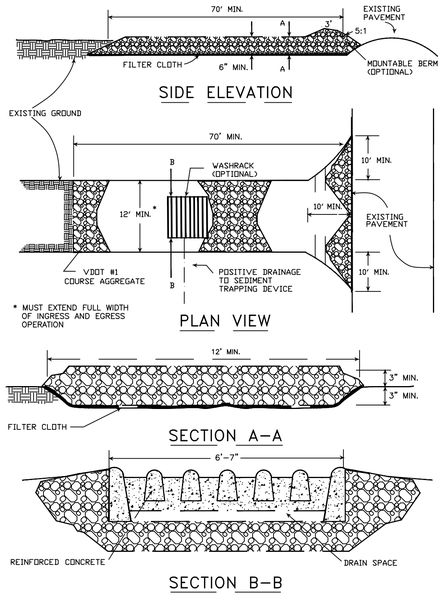


SOURCE: ADAPTED from 1983 Maryland Standards for Soil erosion and Sediment Control, and Va. DSWC — Plate 3.02-1

## CE CONSTRUCTION ENTRANCE

SCALE:

# CONSTRUCTION OF A SILT FENCE (WITH WIRE SUPPORT)

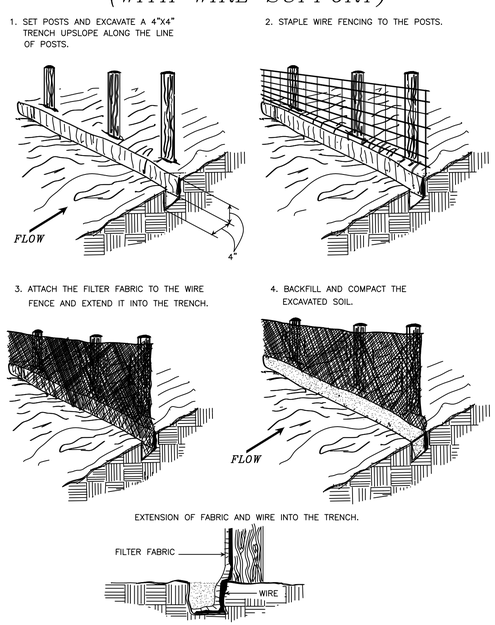


SOURCE: Adapted from Installation of Straw and Fabric Filter Barriers for Sediment Control, Sherwood & Wyant — PLATE 3.05-1

## SF SILT FENCE

SCALE:

## STD & SPEC 3.05 - SILT FENCE

**DEFINITION:**

A TEMPORARY SEDIMENT BARRIER CONSISTING OF A SYNTHETIC FILTER FABRIC STRETCHED ACROSS AND ATTACHED TO SUPPORTING POSTS AND ENTRENCHED.

**CONDITIONS WHERE PRACTICE APPLIES:**

1. BELOW DISTURBED AREAS WHERE EROSION WOULD OCCUR IN THE FORM OF SHEET AND RILL EROSION.
2. WHERE THE SIZE OF THE DRAINAGE AREA IS NO MORE THAN ONE QUARTER ACRE PER 100 FEET OF SILT FENCE LENGTH; THE MAXIMUM SLOPE LENGTH BEHIND THE BARRIER IS 100 FEET; AND THE MAXIMUM GRADIENT BEHIND THE BARRIER IS 50 PERCENT (2:1).
3. IN MINOR SWALES OR DITCH LINES WHERE THE MAXIMUM CONTRIBUTING DRAINAGE AREA IS NO GREATER THAN 1 ACRE AND FLOW IS NO GREATER THAN 1 CFS.
4. SILT FENCE WILL NOT BE USED IN AREAS WHERE ROCK OR SOME OTHER HARD SURFACE PREVENTS THE FULL AND UNIFORM DEPTH ANCHORING OF THE BARRIER.

**PLANNING CONSIDERATIONS:**

LABORATORY WORK AT THE VIRGINIA HIGHWAY AND TRANSPORTATION RESEARCH COUNCIL (VHTRC) HAS SHOWN THAT SILT FENCES CAN TRAP A MUCH HIGHER PERCENTAGE OF SUSPENDED SEDIMENTS THAN STRAW BALES, THOUGH SILT FENCE PASSES THE SEDIMENT-LADEN WATER SLOWER. SILT FENCES ARE PREFERABLE TO STRAW BARRIERS IN MANY CASES BECAUSE OF THEIR DURABILITY AND POTENTIAL COST SAVINGS. WHILE THE FAILURE RATE OF SILT FENCES IS LOWER THAN THAT OF STRAW BARRIERS, MANY INSTANCES HAVE BEEN OBSERVED WHERE SILT FENCES ARE IMPROPERLY INSTALLED, INVITING FAILURE AND SEDIMENT LOSS. THE INSTALLATION METHODS OUTLINED HERE CAN IMPROVE PERFORMANCE AND REDUCE FAILURES.

AS NOTED, FLOW RATE THROUGH SILT FENCE IS SIGNIFICANTLY LOWER THAN THE FLOW RATE FOR STRAW BALE BARRIERS. THIS CREATES MORE PONDING AND HENCE MORE TIME FOR SEDIMENT .TO FALL OUT. TABLE 3.05-A DEMONSTRATES THESE RELATIONSHIPS.

BOTH WOVEN AND NON-WOVEN SYNTHETIC FABRICS ARE COMMERCIALLY AVAILABLE. THE WOVEN FABRICS GENERALLY DISPLAY HIGHER STRENGTH THAN THE NON-WOVEN FABRICS AND, IN MOST CASES, DO NOT REQUIRE ANY ADDITIONAL REINFORCEMENT. WHEN TESTED UNDER ACID AND ALKALINE WATER CONDITIONS, MOST OF THE WOVEN FABRICS INCREASE IN STRENGTH, WHILE THE REACTIONS OF NON-WOVEN FABRICS TO THESE CONDITIONS ARE VARIABLE. THE SAME IS TRUE OF TESTING UNDER EXTENSIVE ULTRAVIOLET RADIATION. PERMEABILITY RATES VARY REGARDLESS OF FABRIC TYPE. WHILE ALL OF THE FABRICS DEMONSTRATE VERY HIGH FILTERING EFFICIENCIES FOR SANDY SEDIMENTS, THERE IS CONSIDERABLE VARIATION AMONG BOTH WOVEN AND NON-WOVEN FABRICS WHEN FILTERING THE FINER SILT AND CLAY PARTICLES.

**DESIGN CRITERIA:**

1. NO FORMAL DESIGN IS REQUIRED. AS WITH STRAW BALE BARRIERS, AN EFFORT SHOULD BE MADE TO LOCATE SILT FENCE AT LEAST 5 FEET TO 7 FEET BEYOND THE BASE OF DISTURBED SLOPES WITH GRADES GREATER THAN 7%.

## CONSTRUCTION SPECIFICATIONS:

**MATERIALS**

1. SYNTHETIC FILTER FABRIC SHALL BE A PERVIOUS SHEET OF PROPYLENE, NYLON, POLYESTER OR ETHYLENE YARN AND SHALL BE CERTIFIED BY THE MANUFACTURER OR SUPPLIER AS CONFORMING TO THE REQUIREMENTS NOTED IN TABLE 3.05-B.
2. SYNTHETIC FILTER FABRIC SHALL CONTAIN ULTRAVIOLET RAY INHIBITORS AND STABILIZERS TO PROVIDE A MINIMUM OF SIX MONTHS OF EXPECTED USABLE CONSTRUCTION LIFE AT A TEMPERATURE RANGE OF 0° F TO 120° F.
3. IF WOODEN STAKES ARE UTILIZED FOR SILT FENCE CONSTRUCTION, THEY MUST HAVE A DIAMETER OF 2 INCHES WHEN OAK IS USED AND 4 INCHES WHEN PINE IS USED. WOODEN STAKES MUST HAVE A MINIMUM LENGTH OF 5 FEET.
4. IF STEEL POSTS (STANDARD "U" OR "T" SECTION) ARE UTILIZED FOR SILT FENCE CONSTRUCTION, THEY MUST HAVE A MINIMUM WEIGHT OF 1.33 POUNDS PER LINEAR FOOT AND SHALL HAVE A MINIMUM LENGTH OF 5 FEET.
5. WIRE FENCE REINFORCEMENT FOR SILT FENCES USING STANDARD-STRENGTH FILTER CLOTH SHALL BE A MINIMUM OF 14 GAUGE AND SHALL HAVE A MAXIMUM MESH SPACING OF 6 INCHES.

**INSTALLATION:**

1. THE HEIGHT OF A SILT FENCE SHALL BE A MINIMUM OF 16 INCHES ABOVE THE ORIGINAL GROUND SURFACE AND SHALL NOT EXCEED 34 INCHES ABOVE GROUND ELEVATION.
2. THE FILTER FABRIC SHALL BE PURCHASED IN A CONTINUOUS ROLL CUT TO THE LENGTH OF THE BARRIER TO AVOID THE USE OF JOINTS. WHEN JOINTS ARE UNAVOIDABLE, FILTER CLOTH SHALL BE SPLICED TOGETHER ONLY AT A SUPPORT POST, WITH A MINIMUM 6-INCH OVERLAP, AND SECURELY SEALED.
3. A TRENCH SHALL BE EXCAVATED APPROXIMATELY 4-INCHES WIDE AND 4-INCHES DEEP ON THE UPSLOPE SIDE OF THE PROPOSED LOCATION OF THE MEASURE.
4. WHEN WIRE SUPPORT IS USED, STANDARD-STRENGTH FILTER CLOTH MAY BE USED. POSTS FOR THIS TYPE OF INSTALLATION SHALL BE PLACED A MAXIMUM OF 10-FEET APART (SEE PLATE 3.05-1). THE WIRE MESH FENCE MUST BE FASTENED SECURELY TO THE UPSLOPE SIDE OF THE POSTS USING HEAVY DUTY WIRE STAPLES AT LEAST ONE INCH LONG, TIE WIRES OR HOG RINGS. THE WIRE SHALL EXTEND INTO THE TRENCH A MINIMUM OF TWO INCHES AND SHALL NOT EXTEND MORE THAN 34 INCHES ABOVE THE ORIGINAL GROUND SURFACE. THE STANDARD-STRENGTH FABRIC SHALL BE STAPLED OR WIRED TO THE WIRE FENCE, AND 8 INCHES OF THE FABRIC SHALL BE EXTENDED INTO THE TRENCH. THE FABRIC SHALL NOT BE STAPLED TO EXISTING TREES.
5. WHEN WIRE SUPPORT IS NOT USED, EXTRA-STRENGTH FILTER CLOTH SHALL BE USED. POSTS FOR THIS TYPE OF FABRIC SHALL BE PLACED A MAXIMUM OF 6-FEET APART (SEE PLATE 3.05-2). THE FILTER FABRIC SHALL BE FASTENED SECURELY TO THE UPSLOPE SIDE OF THE POSTS USING ONE INCH LONG (MINIMUM) HEAVY-DUTY WIRE STAPLES OR TIE WIRES AND EIGHT INCHES OF THE FABRIC SHALL BE EXTENDED INTO THE TRENCH. THE FABRIC SHALL NOT BE STAPLED TO EXISTING TREES. THIS METHOD OF INSTALLATION HAS BEEN FOUND TO BE MORE COMMONPLACE THAN #4.
6. IF A SILT FENCE IS TO BE CONSTRUCTED ACROSS A DITCH LINE OR SWALE, THE MEASURE MUST BE OF SUFFICIENT LENGTH TO ELIMINATE ENDFLOW, AND THE PLAN CONFIGURATION SHALL RESEMBLE AN ARC OR HORSESHOE WITH THE ENDS ORIENTED UPSLOPE (SEE PLATE 3.05-2).
   EXTRA-STRENGTH

   FILTER FABRIC SHALL BE USED FOR THIS APPLICATION WITH A MAXIMUM 3-FOOT SPACING OF POSTS.

   ALL OTHER INSTALLATION REQUIREMENTS NOTED IN #5 APPLY.
7. THE 4-INCH BY 4-INCH TRENCH SHALL BE BACKFILLED AND THE SOIL COMPACTED OVER THE FILTER FABRIC.
8. SILT FENCES SHALL BE REMOVED WHEN THEY HAVE SERVED THEIR USEFUL PURPOSE, BUT NOT BEFORE THE UPSLOPE AREA HAS BEEN PERMANENTLY STABILIZED.

**TABLE 3.05-B**

**PHYSICAL PROPERTIES OF FILTER FABRIC IN SILT FENCE**

| PHYSICAL PROPERTY | TEST | REQUIREMENTS |
|---|---|---|
| FILTERING EFFICIENCY | ASTM 5141 | 75% (MINIMUM) |
| TENSILE STRENGTH AT 20% (MAX.) ELONGATION* | VTM-52 | EXTRA STRENGTH - 50 LBS./LINEAR INCH (MINIMUM)<br>STANDARD STRENGTH - 30 LBS./LINEAR INCH (MINIMUM) |
| FLOW RATE | ASTM 5141 | 0.2 GAL./SQ FT./MINUTE (MINIMIM) |
| ULTRAVIOLET RADIATION STABILITY % | ASTM-G-26 | 90% (MINIMUM) |

* REQUIREMENTS REDUCED TO 50% AFTER SIX MONTHS OF INSTALLATION.

SOURCE: VHTRC

## GENERAL REQUIREMENTS:

NO PERSON MAY ENGAGE IN ANY LAND-DISTURBING ACTIVITY UNTIL HE OR SHE HAS SUBMITTED TO THE OFFICE OF BUILDING AND ZONING FOR NORTHUMBERLAND COUNTY AN EROSION AND SEDIMENT CONTROL PLAN FOR THE LAND-DISTURBING ACTIVITY AND SUCH PLAN HAS BEEN APPROVED BY THE PLAN-APPROVING AUTHORITY.

PROJECT WORK WILL COMPLY WITH THE STANDARDS CONTAINED WITHIN THE "VIRGINIA EROSION AND SEDIMENT CONTROL REGULATIONS," AND THE VIRGINIA EROSION AND SEDIMENT CONTROL HANDBOOK (VESC) AS AMENDED AND THE CHESAPEAKE BAY PRESERVATION AREA DESIGNATION AND MANAGEMENT REGULATIONS (CBPA) AS CODIFIED (9VAC25-830).

THIS PROJECT DOES NOT INCLUDE ANY IMPACTS OR WORK WITHIN RESOURCE PROTECTION AREAS (RPAS) AS DESIGNATED BY THE CBPA; NORTHUMBERLAND COUNTY IS A CBPA REGION AND THIS PROJECT IS WITHIN A RESOURCE MANAGEMENT AREA (RMA) AS DEFINED IN COUNTY STATUTES.

AS THIS PROJECT RESULTS IN OVER 2,500 SQUARE FEET OF LAND DISTURBANCE AN E&S PERMIT IS REQUIRED FROM THE COUNTY FOR THIS WORKCOPIES OF THIS PERMIT ARE INCLUDED IN THE PROJECT MANUAL FOR REFERENCE AND THIS PLAN INCLUDES ALL REQUIRED E&S CONTROL MEASURES REFERENCED IN THAT PERMIT.

AS A PUBLIC UTILITY PROJECT THIS PROJECT IS EXEMPT FROM FURTHER WATER QUALITY IMPACT ASSESSMENT UNDER THE C8PA PROVIDED ALL TERMS OF THE E&S PERMIT ARE TOLLOWED PER COUNTY STATUTE (S 54-18 - EXEMPTIONS) AS WORK IS LOCATED OUTSIDE OT DESIGNATED RPAS AND NO MORE LAND SHALL BE DISTURBED THAN IS NECESSARY TO PROVIDE FOR THE PROPOSED UTILITY INSTALLATION. ALL SUCH CONSTRUCTION, INSTALLATION AND MAINTENANCE OF SUCH UTILITIES AND FACILITIES SHALL BE IN COMPLIANCE WITH ALL APPLICABLE STATE AND FEDERAL REQUIREMENTS AND PERMITS AND DESIGNED AND CONDUCTED IN A MANNER THAT PROTECTS WATER QUALITY.

**9VAC25-840-40. MINIMUM STANDARDS. CONTRACTOR SHALL EXECUTE WORK CONSISTENT WITH THE FOLLOWING CRITERIA, TECHNIQUES AND METHODS:**

1. PERMANENT OR TEMPORARY SOIL STABILIZATION SHALL BE APPLIED TO DENUDED AREAS WITHIN SEVEN DAYS AFTER FINAL GRADE IS REACHED ON ANY PORTION OF THE SITE. TEMPORARY SOIL STABILIZATION SHALL BE APPLIED WITHIN SEVEN DAYS TO DENUDED AREAS THAT MAY NOT BE AT FINAL GRADE BUT WILL REMAIN DORMANT FOR LONGER THAN 14 DAYS. PERMANENT STABILIZATION SHALL BE APPLIED TO AREAS THAT ARE TO BE LEFT DORMANT FOR MORE THAN ONE YEAR.
2. DURING CONSTRUCTION OF THE PROJECT, SOIL STOCK PILES AND BORROW AREAS SHALL BE STABILIZED OR PROTECTED WITH SEDIMENT TRAPPING MEASURES- THE APPLICANT IS RESPONSIBLE FOR THE TEMPORARY PROTECTION AND PERMANENT STABILIZATION OF ALL SOIL STOCKPILES ON SITE AS WELL AS BORROW AREAS AND SOIL INTENTIONALLY TRANSPORTED FROM THE PROJECT SITE.
3. A PERMANENT VEGETATIVE COVER SHALL BE ESTABLISHED ON DENUDED AREAS NOT OTHENVISE PERMANENTLY STABILIZED. PERMANENT VEGETATION SHALL NOT BE CONSIDERED ESTABLISHED UNTIL A GROUND COVAR IS ACHIEVED THAT IS UNIFORM, MATURE ENOUGH TO SURVIVE AND WILL INHIBIT EROSIOM.
4. SEDIMENT BASINS AND TRAPS, PERIMETER DIKES, SEDIMENT BARRIERS AND OTHER MEASURES INTENDED TO TRAP SEDIMENT SHALL BE CONSTRUCTED AS A FIRST STEP IN ANY LAND-DISTURBING ACTIVITY AND SHALL BE MADE FUNCTIONAL BEFORE UPSLOPE LAND DISTURBANCE TAKES PLACE.
5. STABILIZATION MEASURES SHALL BE APPLIED TO EARTHEN STRUCTURES SUCH AS DAMS, DIKES AND DIVERSIONS IMMEDIATELY AFTER INSTALLATION. (NOT APPLICABLE TO THIS PROJECT SCOPE)
6. SEDIMENT TRAPS AND SEDIMENT BASINS SHALL BE DESIGNED AND CONSTRUCTED BASED UPON THE TOTAL DRAINAGE AREA TO BE SERVED BY THE TRAP OR BASIN. (NOT APPLICABLE TO THIS PROJECT SCOPE)
   a. THE MINIMUM STORAGE CAPACITY OF A SEDIMENT TRAP SHALL BE 134 CUBIC YARDS PER ACRE OF DRAINAGE AREA AND THE TRAP SHALL ONLY CONTROL DRAINAGE AREAS LESS THAN THREE ACRES. (NOT APPLICABLE TO HIS PROJECT SCOPE)
   b. SURFACE RUNOFF FROM DISTURBED AREAS THAT IS COMPRISED OF FLOW FROM DRAINAGE AREAS GREATER THAN OR EQUAL TO THREE ACRES SHALL BE CONTROLLED BY A SEDIMENT BASIM THE MINIMUM STORAGE CAPACITY OT A SEDIMENT BASIN SHALL BE 134 CUBIC YARDS PER ACRE OF DRAINAGE AREA. THE OUTFALL SYSTEM SHALL, AT A MINIMUM, MAINTAIN THE STRUCTURAL INTEGRITY OF THE BASIN DURING A 25-YEAR STORM OF 24-HOUR DURATION- RUNOFF COEFFICIENTS USED IN RUNOFF CALCULATIONS SHALL CORRESPOND TO A BARE EATTH CONDITION OR THOSE CONDITIONS EXPECTED TO EXIST WHILE THE SEDIMENT BASIN IS UTILIZED- (NOT APPLICABLE TO THIS PROJECT SCOPE)
7. CUT AND FILL SLOPES SHALL BE DESIGNED AND CONSTRUCTED IN A MANNER THAT WILL MINIMIZE EROSION- SLOPES THAT ARE FOUND TO BE ERODING EXCESSIVELY WITHIN ONE YEAR OF PERMANENT STABILIZATION SHALL BE PROVIDED WITH ADDITIONAL SLOPE STABILIZING MEASURES UNTIL THE PROBLEM IS CORRECTED. (NOT APPLICABLE TO THIS PROJECT SCOPE)
8. CONCENTRATED RUNOFF SHALL NOT FLOW DOWN CUT OR FILL SLOPES UNLESS CONTAINED WITHIN AN ADEQUATE TEMPORARY OR PERMANENT CHANNEL, FLUME OR SLOPE DRAIN STRUCTURE- (NOT APPLICABLE TO THIS PROJECT SCOPE)
9. WHENEVER WATER SEEPS FROM A SLOPE FACE, ADEQUATE DRAINAGE OR OTHER PROTECTION SHALL BE PROVIDED. (NOT APPLICABLE TO THIS PROJECT SCOPE)
10. ALL STORM SEWER INLETS THAT ARE MADE OPERABLE DURING CONSTRUCTION SHALL BE PROTECTED SO THAT SEDIMENT-LADEN WATER CANNOT ENTER THE CONVEYANCE SYSTEM WITHOUT FIRST BEING FILTERED OR OTHENVISE TREATED TO REMOVE SEDIMENT. (NOT APPLICABLE TO THIS PROJECT SCOPE)
11. BEFORE NEWLY CONSTRUCTED STORMWATER CONVEYANCE CHANNELS CR PIPES ARE MADE OPERATIONAL, ADEQUATE OUTLET PROTECTION AND ANY REQUIRED TEMPORARY OR PERMANENT CHANNEL LINING SHALL BE INSTALLED IN BOTH THE CONVEYANCE CHANNEL AND RECEIVING CHANNEL. (NOT APPLICABLE TO THIS PROJECT SCOPE)
12. WHEN WORK IN A LIVE WATERCOURSE IS PERFORMED, PRECAUTIONS SHALL BE TAKEN TO MINIMIZE ENCROACHMENT, CONTROL SEDIMENT TRANSPORT AND STABILIZE THE WORK AREA TO THE GREATEST EXTENT POSSIBLE DURING CONSTRUCTION. NONERODIBLE MATERIAL SHALL BE USED FOR THE CONSTRUCTION OF CAUSEWAYS AND COFFERDAMS. EARTHEN FILL MAY BE USED FOR THESE STRUCTURES IF ARMORED BY NONERODIBLE COVER MATERIALS. (NOT APPLICABLE TO THIS PROJECT SCOPE)
13. WHEN A LIVE WATERCOURSE MUST BE CROSSED BY CONSTRUCTION VEHICLES MORE THAN TWICE IN ANY SIX-MONTH PERIOD, A TEMPORARY VEHICULAR STREAM CROSSING CONSTRUCTED OF NONERODIBLE MATERIAL SHALL BE PROVIDED- (NOT APPLICABLE TO THIS PROJECT SCOPE)
14. ALL APPLICABLE FEDERAL, STATE AND LOCAL REQUIREMENTS PERTAINING TO WORKING IN OR CROSSING LIVE WATERCOURSES SHALL BE MET (NOT APPLICABLE TO THIS PROJECT SCOPE)
15. THE BED AND BANKS OF A WATERCOURSE SHALL BE STABILIZED IMMEDIATELY AFTER WORK IN THE WATERCOURSE IS COMPLETED. (NOT APPLICABLE TO THIS PROJECT SCOPE)
16. UNDERGROUND UTILITY LINES SHALL BE INSTALLED IN ACCORDANCE WITH THE FOLLOWING STANDARDS IN ADDITION TO OTHER APPLICABLE CRITERIA:
   a. NO MORE THAN 500 LINEAR FEET OF TRENCH MAY BE OPENED AT ONE TIME
   b. EXCAVATED MATERIAL SHALL BE PLACED ON THE UPHILL SIDE OF TRENCHES.
   c. EFFLUENT FROM DEWATERING OPERATIONS SHALL BE FILTERED OR PASSED THROUGH AN APPROVED SEDIMENT TRAPPING DEVICE, OR BOTH, AND DISCHARGED IN A MANNER THAT DOES NOT ADVERSELY AFFECT FLOWING STREAMS OR OFF-SITE PROPENY.
   d. MATERIAL USED FOR BACKFILLING TRENCHES SHALL BE PROPERLY COMPACTED IN ORDER TO MINIMIZE EROSION AND PROMOTE STABILIZATION.
   e. RESTABILIZATION SHALL BE ACCOMPLISHED IN ACCORDANCE WITH THIS CHAPTER
   f. APPLICABLE SAFETY REQUIREMENTS SHALL BE COMPLIED WITH.
17. WHERE CONSTRUCTION VEHICLE ACCESS ROUTES INTERSECT PAVED OR PUBLIC ROADS, PROVISIONS SHALL BE MADE TO MINIMIZE THE TRANSPORT OF SEDIMENT BY VEHICULAR TRACKING ONTO THE PAVED SURFACE. WHERE SEDIMENT IS TRANSPORTED ONTO A PAVED OR PUBLIC ROAD SURFACE, THE ROAD SURFACE SHALL BE CLEANED THOROUGHLY AT THE END OF EACH DAY- SEDIMENT SHALL BE REMOVED FROM THE ROADS BY SHOVELING OR SWEEPING AND TRANSPORTED TO A SEDIMENT CONTROL DISPOSAL AREA- STREET WASHING SHALL BE ALLOWED ONLY AFTER SEDIMENT IS REMOVED IN THIS MANNER- THIS PROVISION SHALL APPLY TO INDIVIDUAL DEVELOPMENT LOTS AS WELL AS TO LARGER LAND-DISTURBING ACTIVITIES. (NOT APPLICABLE TO THIS PROJECT SCOPE)
18. ALL TEMPORARY EROSION AND SEDIMENT CONTROL MEASURES SHALL BE REMOVED WITHIN 30 DAYS AFTER FINAL SITE STABILIZATION OR AFTER THE TEMPORARY MEASURES ARE NO LONGER NEEDED, UNLESS OTHERWISE AUTHORIZED BY THE VESCP AUTHORITY. TRAPPED SEDIMENT AND THE DISTURBED SOIL AREAS RESULTING FROM THE DISPOSITION OF TEMPORARY MEASURES SHALL BE PERMANENTLY STABILIZED TO PREVENT FURTHER EROSION AND SEDIMENTATION.
19. PROPERTIES AND WATENVAYS DOWNSTREAM FROM DEVELOPMENT SITES SHALL BE PROTECTED FROM SEDIMENT DEPOSITION, EROSION AND DAMAGE DUE TO INCREASES IN VOLUME, VELOCITY AND PEAK FLOW RATE OF STORMWATER RUNOFF FOR THE STATED FREQUENCY STORM OF 24-HOUR DURATION IN ACCORDANCE WITH THE FOLLOWING STANDARDS AND CRITERIA- STREAM RESTORATION AND RELOCATION PROJECTS THAT INCORPORATE NATURAL CHANNEL DESIGN CONCEPTS ARE NOT MAN-MADE CHANNELS AND SHALL BE EXEMPT FROM ANY FLOW RATE CAPACITY AND VELOCITY REQUIREMENTS TOR NATURAL OR MAN-MADE CHANNELS: (NOT APPLICABLE TO THIS PROJECT SCOPE, LESS THAN 1 SQUARE FEET OF NEW IMPERVIOUS COVER CREATED ON PROJECT; NET REDUCTION OF 4,700 STT-)


MANGRUM Consulting & Design
1500 Clayton Avenue, Lynchburg VA 24503
434.665.1515 Rob@MangrumConsulting.com


COMMONWEALTH OF VIRGINIA — CARL ROBERT LAWRENCE MANGRUM — Lic. No. 83450 — 11/22/2023 — PROFESSIONAL ENGINEER

NORTHUMBERLAND HIGH & MIDDLE SCHOOLS

SANITARY TREATMENT MODIFICATIONS

OWNER: NORTHUMBERLAND COUNTY
HEATHSVILLE, VIRGINIA

| MARK | DATE | DESCRIPTION |
|---|---|---|

PROJECT NO: 2346
DATE: 11/22/2023
DRAWN BY: MCT
CHECKED BY: CRLM
SHEET TITLE

E&S DETAILS

C-103

SHEET 5 OF 15


X:\PROJTC\2346_MCD-NORTHUMBERLAND HS\CAD\2346C103.DWG PLOT: 11/21/2023 1:57 PM

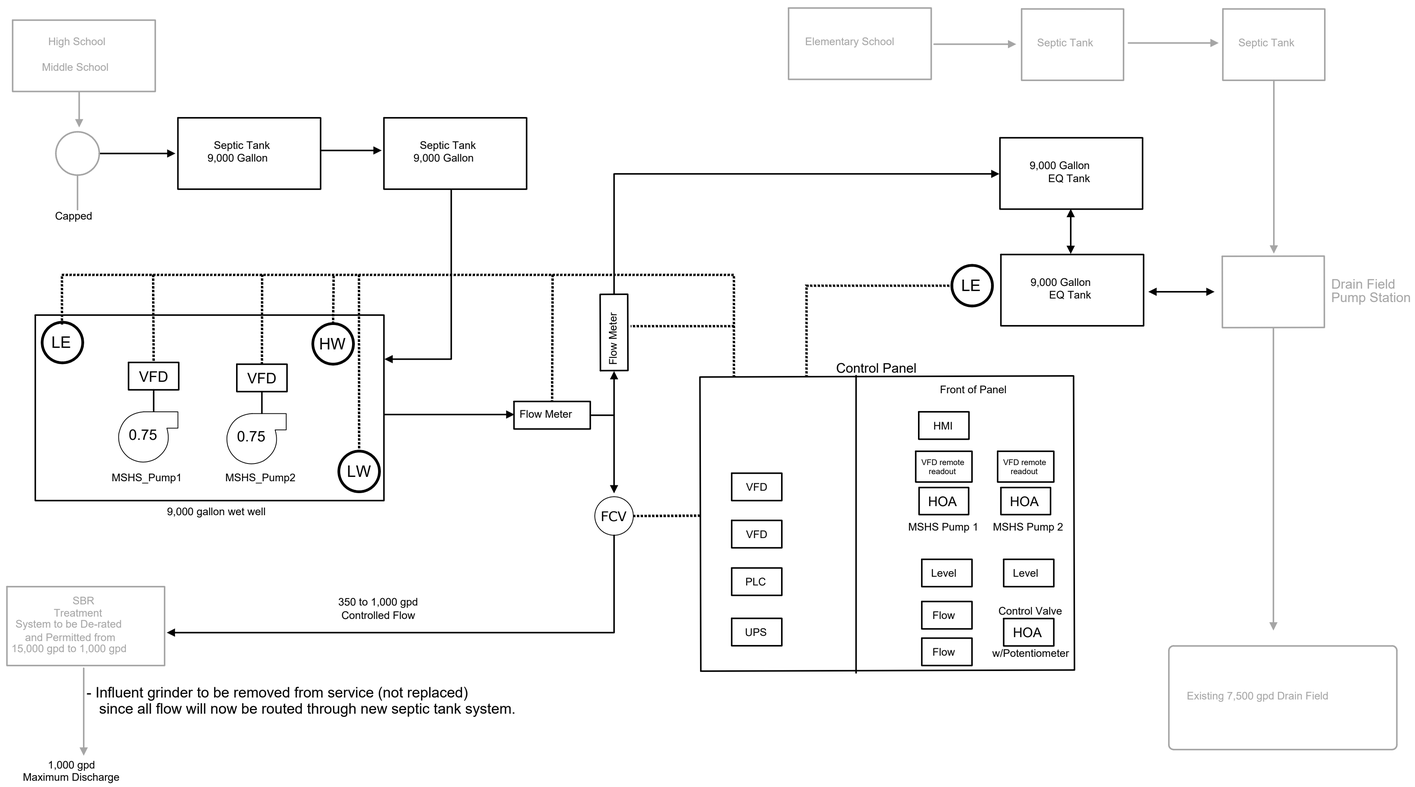


# PROCESS FLOW DIAGRAM

NOT TO SCALE

MANGRUM
Consulting & Design
1500 Clayton Avenue, Lynchburg VA 24503
434.665.1515 Rob@MangrumConsulting.com

COMMONWEALTH OF VIRGINIA
CARL ROBERT LAWRENCE MANGRUM
Lic. No. 53450
11/22/2023
PROFESSIONAL ENGINEER

NORTHUMBERLAND HIGH & MIDDLE SCHOOLS

SANITARY TREATMENT MODIFICATIONS

OWNER:
NORTHUMBERLAND COUNTY
HEATHSVILLE, VIRGINIA

| MARK | DATE | DESCRIPTION |
|---|---|---|

| | |
|---|---|
| PROJECT NO: | 2346 |
| DATE: | 11/22/2023 |
| DRAWN BY: | MCT |
| CHECKED BY: | CRLM |

SHEET TITLE

PROCESS FLOW DIAGRAM

D-001

SHEET ---- OF 15

X:\PROJ\TCS2346_MCD-NORTHUMBERLANDHS\CAD\2346D001.DWG PLOT: 11/21/2023 1:57 PM

## GENERAL NOTES:

A. FORCE MAIN SHALL BE 2-INCH HDPE IPS SIZE (INNER DIAMETER CONTROLLED), PE4710, DR 11.5, NSF 61 APPROVED, MINIMUM 2% CARBON BLACK FOR UV RAY PROTECTION, AND SHALL MEET ASTM D2239. THE FORCE MAIN SHALL BE ELECTRO-FUSION SOCKET WELDED WITH PIPE BEDDING MATERIAL AS SHOWN ON D-501. TRANSITION FITTINGS FROM PVC/PVC TO HDPE SHALL NOT BE BURIED AND SHALL BE NSF APPROVED PE OR HDPE COMPRESSION TYPE FITTINGS FOR HDPE PIPE MEETING OR EXCEEDING PIPE SPECIFICATIONS, ASTM D2239, AND SPECIFICALLY RATED FOR IPS SIZED (INNER DIAMETER CONTROLLED) HDPE PIPE.

B. GRAVITY SEWER PIPE SHALL BE ANSI/AWWA C900-16; SDR 32.5 (125 PSI); PIPE COMPOUND: ASTM D1784 CELL CLASS 12454; GASKET: ASTM F477; INTEGRAL BELL JOINT: ASTM D3139; ANSI/NSF 61 CERTIFIED.

C. CHECK VALVE(S) SHALL BE POLYPROPYLENE SWING CHECK TYPE WITH COUNTER WEIGHTED ARM AND SHALL BE OF SOLID THERMOPLASTIC CONSTRUCTION, HAVING NO METAL THAT COMES IN CONTACT WITH MEDIUM, AND SHALL HAVE EPDM SEATS AND SEALS. VALVE TO HAVE ANSI FLANGED CONNECTIONS. VALVES SHALL INCORPORATE A SINGLE DISC DESIGN SUITABLE FOR EITHER HORIZONTAL OR VERTICAL INSTALLATIONS. VALVES SHALL BE OF TOP ENTRY BONNET DESIGN FOR MAINTENANCE PURPOSES WITH O-RING TOP BONNET SEAL. PP SHALL BE CONFORMING TO ASTM D4101 CELL CLASSIFICATION PP0210B67272. VALVES SHALL BE RATED TO 150PSI SIZES 3/4" THROUGH 3" AT 70º F, AS MANUFACTURED BY ASAHI/AMERICA.

D. MODULATION DIAPHRAGM CONTROL VALVE SHALL BE TYPE-14 TRUE UNION TYPE AND SOLID CPVC THERMOPLASTIC CONSTRUCTION FOR BODY AND BONNET WITH SOCKET END CONNECTORS. THE VALVES SHALL COME STANDARD WITH A POSITION INDICATOR, TRAVEL STOP AND BONNET O-RING SEALING ARRANGEMENT. THE VALVE SHALL BE WEIR TYPE WITH A SQUARE BONNET BODY SEALING DESIGN AND BAYONET CONNECTION DIAPHRAGM. DIAPHRAGMS AND O-RINGS SHALL BE EPDM. CPVC CONFORMING TO ASTM D1784 CELL CLASSIFICATION 23567A, PPG (BONNET ONLY) CONFORMING TO ASTM D4101 CELL CLASSIFICATION PP0110M20A21130. SHALL BE RATED TO 150PSI AT 70º F, AS MANUFACTURED BY ASAHI/AMERICA, INC.

E. ELECTRIC ACTUATOR FOR MODULATING DIAPHRAGM CONTROL VALVES SHALL BE SERIES 92 REVERSING, CAPACITOR RUN 120 VAC 50/60 HZ, MOTOR WITH INTEGRAL THERMAL OVERLOAD PROTECTION WITH AUTOMATIC RESET; PERMANENTLY LUBRICATED, ROCKWELL HARDENED GEARING; THERMALLY BONDED POLYESTER POWDER COAT FINISH; WEATHER PROOF ENCLOSURE WITH SS TRIM; TWO ½" FNPT CONDUIT ENTRIES TO ELIMINATE CROSS FEED BETWEEN CONTROL, FEEDBACK, AND POWER SIGNALS; HIGHLY VISIBLE BEACON POSITION INDICATOR; STANDARD END OF TRAVEL LIMIT SWITCHES CAN BE USED FOR LIGHT INDICATION; DECLUTCHABLE MANUAL OVERRIDE; RHM MODULE (CONSISTING OF A HEATER AND THERMOSTAT, AND 2-SPDT 8A DRY CONTACT RELAYS FOR PLC POSITION CONFIRMATION. CAPTIVATED SS HEXHEAD SLOTTED ENCLOSURE SCREWS; MOUNTING IS WITH SS BRACKET, COUPLING AND FASTENERS; FEEDBACK POTENTIOMETER; POSITIONER (MODULATING PCB); TRANSMITTER; REMOTE CONTROL STATION HMI CONTROLLED. AS MANUFACTURED BY ASAHI/AMERICA, INC.

F. BALL VALVES:

CPVC BALL VALVES FOR ISOLATION: ALL BALL VALVES SHALL BE CPVC AND SHALL BE OF TRUE UNION DESIGN WITH TWO-WAY BLOCKING CAPABILITY. ALL O-RINGS SHALL BE EPDM WITH PTFE SEATS. PTFE SEATS SHALL HAVE ELASTOMERIC BACKING CUSHION OF THE SAME MATERIAL AS THE VALVE SEALS. STEM SHALL HAVE DOUBLE O-RINGS AND BE OF BLOWOUT PROOF DESIGN. THE VALVE HANDLE SHALL DOUBLE AS CARRIER REMOVAL AND/OR TIGHTENING TOOL. ISO MOUNTING PAD SHALL BE INTEGRALLY MOLDED TO VALVE BODY FOR ACTUATION. CPVC CONFORMING TO ASTM D1784 CELL CLASSIFICATION 23567-A. SHALL HAVE A PRESSURE RATING OF 230PSI FOR SIZES 1/2" TO 3" AND 150PSI FOR 4" AT 70º F. MUST CARRY A TWO-YEAR GUARANTEE. MANUFACTURER: ASAHI/AMERICA, INC. TYPE - 21/21A.

G. ALL PVC AND CPVC PIPE SMALLER THAN 4 INCHES SHALL BE SOLVENT WELDED WITH IPS WELDON 724 INDUSTRIAL GRADE ALKALINE CHEMICAL RESISTANT SOLVENT CEMENT.

H. MAGNETIC FLOWMETERS:

MAGNETIC FLOW METER SYSTEMS SHALL INCLUDE A MAGNETIC FLOW TUBE AND A MICROPROCESSOR-BASED "SMART" TRANSMITTER AND SHALL UTILIZE THE CHARACTERIZED FIELD PRINCIPLE OF ELECTROMAGNETIC INDUCTION, AND SHALL PRODUCE DC SIGNALS DIRECTLY PROPORTIONAL TO THE LIQUID FLOW RATE:

1. SENSING HEAD:
   - a. END CONNECTIONS: CLASS 150 RAISED FACE FORGED STEEL FLANGES.
   - b. PIPE MATERIAL: 304 STAINLESS STEEL.
   - c. LINER MATERIAL AND ASSOCIATED MAXIMUM OPERATING TEMPERATURE: URETHANE
   - d. ELECTRODE MATERIAL: STAINLESS STEEL.
   - e. GROUNDING RING: STAINLESS STEEL.
   - f. RATED FOR SUBMERSION CONDITIONS POTTED JUNCTION BOX.
2. PROGRAMMABLE MICROPROCESSOR BASED INDICATING TRANSMITTER: (TRANSMITTER REMOTE MOUNT)
   - a. POWER SUPPLY: 120 VOLTS AC.
   - b. THE TRANSMITTER SHALL UTILIZE "SMART" ELECTRONICS AND SHALL CONTAIN AUTOMATIC, CONTINUOUS ZERO CORRECTION.
   - c. LOCAL OPERATOR INTERFACE CAPABLE OF DISPLAYING FLOW RATE AND TOTALIZED FLOW AND LOCATED AS INDICATED ON THE DRAWINGS.
   - d. THE TRANSMITTER SHALL FEATURE CONTINUOUS, ON-DEMAND CALIBRATION VERIFICATION WITHOUT USE OF ANY EXTERNAL DEVICES.
   - e. OUTPUT: 4-20 M AMP OUTPUT PROPORTIONAL TO FLOW RATE.
   - f. NEMA 4X RATED.
   - g. TRANSMITTER SHALL BE WALL MOUNTED OR UNISTRUT MOUNTED AND SHALL NOT BE MOUNTED ON THE FLOW METER.
3. SYSTEM PERFORMANCE:
   - a. ACCURACY: PLUS OR MINUS 0.5 PERCENT OF READING AT FLOW VELOCITIES BETWEEN 0.5 AND 10 FEET PER SECOND;
   - b. REPEATABILITY: PLUS OR MINUS 0.1 PERCENT OF READING.
4. MANUFACTURERS:
   - a. ROSEMOUNT 8750 W MAGNETIC FLOW METER, 2" SIZE

I. PUMP SPECIFICATIONS:

GOULDS SEWAGE PUMP 2GFV3214K; 3.2HP; 3 PHASE; 460V; VORTEX IMPELLER; 3,400 RPM MOTOR; SEAL LEAK AND HIGH TEMP SENSORS (MINI CAS); INVERTER DUTY RATED;
DESIGN CONDITIONS: 27 GPM AT 42 FT TDH @ 100% SPEED
DESIGN CONDITIONS: 14 GPM AT 10 FT TDH @ 50% SPEED
PUMP CONTROL (VFDs) AND MINI CAS TO BE HOUSED IN A CUSTOM CONTROL PANEL WITH INTEGRAL MOTOR OVERLOAD AND OVER CURRENT PROTECTION FOR EACH PUMP MOTOR. SEE E-601.

MANGRUM
Consulting & Design
1500 Clayton Avenue, Lynchburg VA 24503
434.665.1515 Rob@MangrumConsulting.com

COMMONWEALTH OF VIRGINIA
CARL ROBERT LAWRENCE MANGRUM
Lic. No. 53450
11/22/2023
PROFESSIONAL ENGINEER

NORTHUMBERLAND HIGH & MIDDLE SCHOOLS

SANITARY TREATMENT MODIFICATIONS

OWNER:
NORTHUMBERLAND COUNTY
HEATHSVILLE, VIRGINIA

| MARK | DATE | DESCRIPTION |
|---|---|---|

PROJECT NO: 2346
DATE: 11/22/2023
DRAWN BY: MCT
CHECKED BY: CRLM
SHEET TITLE

GENERAL NOTES

D-002

SHEET 6 OF 15

X:\PROJ\TCS2346_MCD-NORTHUMBERLANDHS\CAD\2346D002.DWG PLOT: 11/21/2023 1:57 PM

1 SEPTIC TANK AND PUMP STATION PLAN

SCALE: 1" = 10'

0 10' 20'

N

## SHEET KEY NOTES

1. CORE DRILL EXISTING 4'Ø MANHOLE FOR NEW 8" GRAVITY PVC. UTILIZE A MECHANICALLY INSERTED BOOT STYLE RUBBER CONNECTOR.
2. 9,000 GALLON SEPTIC TANK, SEE D1/D-301 FOR DETAIL.
3. 9,000 GALLON WET WELL, SEE D2/D-301 FOR DETAIL.
4. CORE DRILL AND LINK SEAL BOTH STRUCTURES AND CONNECT WITH 8" GRAVITY SEWER. SEE S1/D-301 AND S2/D-301 FOR DETAILS.
5. MSHS PUMP NO. 1, SEE D-301 FOR DETAIL. SEE D-002 FOR SPECIFICATION.
6. MSHS PUMP NO. 2, SEE D-301 FOR DETAIL. SEE D-002 FOR SPECIFICATION.
7. VALVE VAULT, SEE D1/D-501 FOR DETAIL.
8. 2" SCH. 40 CPVC.
9. FLOW METER VAULT, SEE D2/D-501 FOR DETAIL.
10. MODULATING CONTROL VALVE, SEE D-002 AND D3/D-501 FOR DETAIL.
11. CONTROL PANEL, SEE E-001 & E-601.
12. CUT EXISTING 8" SEWER AND PERMANENTLY CAP EACH END.
13. ABANDON IN PLACE EXISTING 8" SEWER.
14. 8" GRAVITY PVC
15. 2" HDPE FORCEMAIN, SEE D-002 FOR SPECIFICATIONS. TRANSITION FROM CPVC TO HDPE WITHIN FLOW METER VAULT USING MECHANICAL COMPRESSION FITTINGS.
16. 2" HDPE TO EQ TANKS, SEE C-101 FOR CONTINUATION.
17. EXISTING SEWAGE TREATMENT PLANT.
18. EXISTING CHLORINE CONTACT TANK.
19. EXISTING POWER DISTRIBUTION BUILDING.
20. 1½" SCH. 40 CPVC.
21. ROUTE 1.5" CPVC ALONG EXISTING CONCRETE TANK WALL AND EXTEND 12" ABOVE TOP OF STRUCTURE AND THEN EXTEND DOWN 7' INTO THE TANK. HEAT TRACE AND INSULATE PIPING. USE STAINLESS PVC FASTENERS TO SUPPORT PIPE TO EXISTING CONCRETE SURFACES EVERY 24" ALONG ENTIRE PIPE ROUTING.

MANGRUM
Consulting & Design
1500 Clayton Avenue, Lynchburg VA 24503
434.665.1515 Rob@MangrumConsulting.com

COMMONWEALTH OF VIRGINIA
CARL ROBERT LAWRENCE MANGRUM
Lic. No. 53450
11/22/2023
PROFESSIONAL ENGINEER

NORTHUMBERLAND HIGH & MIDDLE SCHOOLS

SANITARY TREATMENT MODIFICATIONS

OWNER:
NORTHUMBERLAND COUNTY
HEATHSVILLE, VIRGINIA

| MARK | DATE | DESCRIPTION |
|---|---|---|

| | |
|---|---|
| PROJECT NO: | 2346 |
| DATE: | 11/22/2023 |
| DRAWN BY: | MCT |
| CHECKED BY: | CRLM |

SHEET TITLE

SEPTIC TANK AND PUMP STATION PLAN

D-101

SHEET 7 OF 15

X:\PROJ\TCS\2346_MCD-NORTHUMBERLAND\HS\CAD\2346D101.DWG PLOT: 11/21/2023 1:57 PM

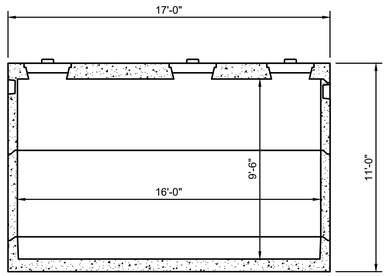


NOTES FOR D1:

1. CONCRETE: 5,000 PSI MIN. STRENGTH @ 28 DAYS.
2. STEEL REINFORCING - ASTM A-615, GRADE 60.
3. COVER TO SEEL - 1" MIN.
4. TANKS ARE DESIGNED TO MEET ASTM C858 AND ACI 318 WITH AASHTO HS-20 LOADING.
5. EARTH COVER - 0 TO 5 FEET MAX.
6. CONSTRUCTION JOINT - SEALED WITH 1" DIA. BUTYL RUBBER OR EQUAL.
7. SIZE OF INFLUENT/EFFLUENT PIPING PENETRATIONS SHALL BE AS SHOWN ON THE DRAWINGS. ALL INTERNAL PIPING SHALL MATCH THE INFLUENT/EFFLUENT PIPE SIZE SHOWN ON THE DRAWINGS.
8. PENETRATIONS FOR PIPE SIZES 4" AND LARGER SHALL HAVE A CAST-IN RUBBER BOOT STYLE CONNECTOR MEETING ASTM C923.
9. PENETRATIONS FOR PIPE SIZES SMALLER THAN 4" SHALL HAVE A MECHANICALLY INSTALLED RUBBER BOOT STYLE CONNECTOR MEETING ASTM C923. STRUCTURE TO BE CORE DRILLED.

## D1 EQUALIZATION TANK SYSTEM SECTION

SCALE: 1/4" = 1'-0"

0 4' 8'

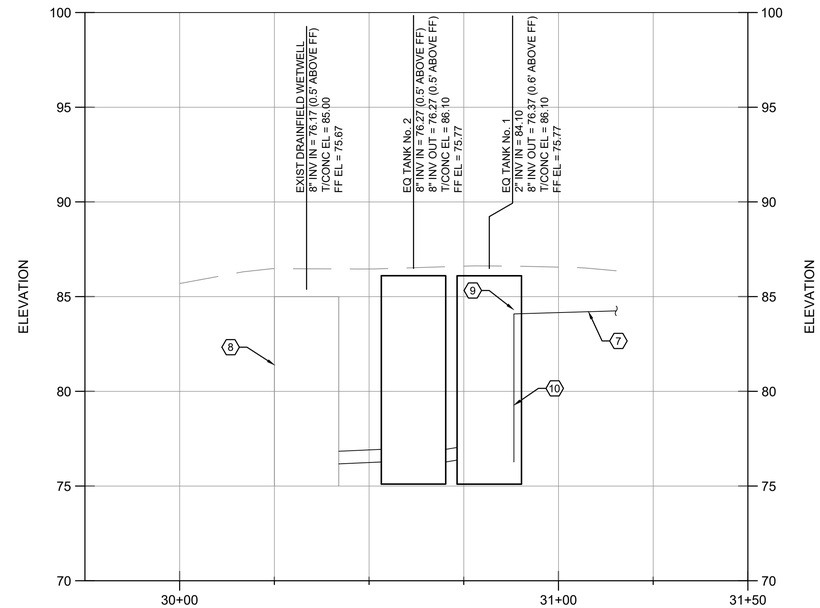


## S1 EQUALIZATION TANK SYSTEM SECTION

SCALE: 1" = 20'

0 20' 40'

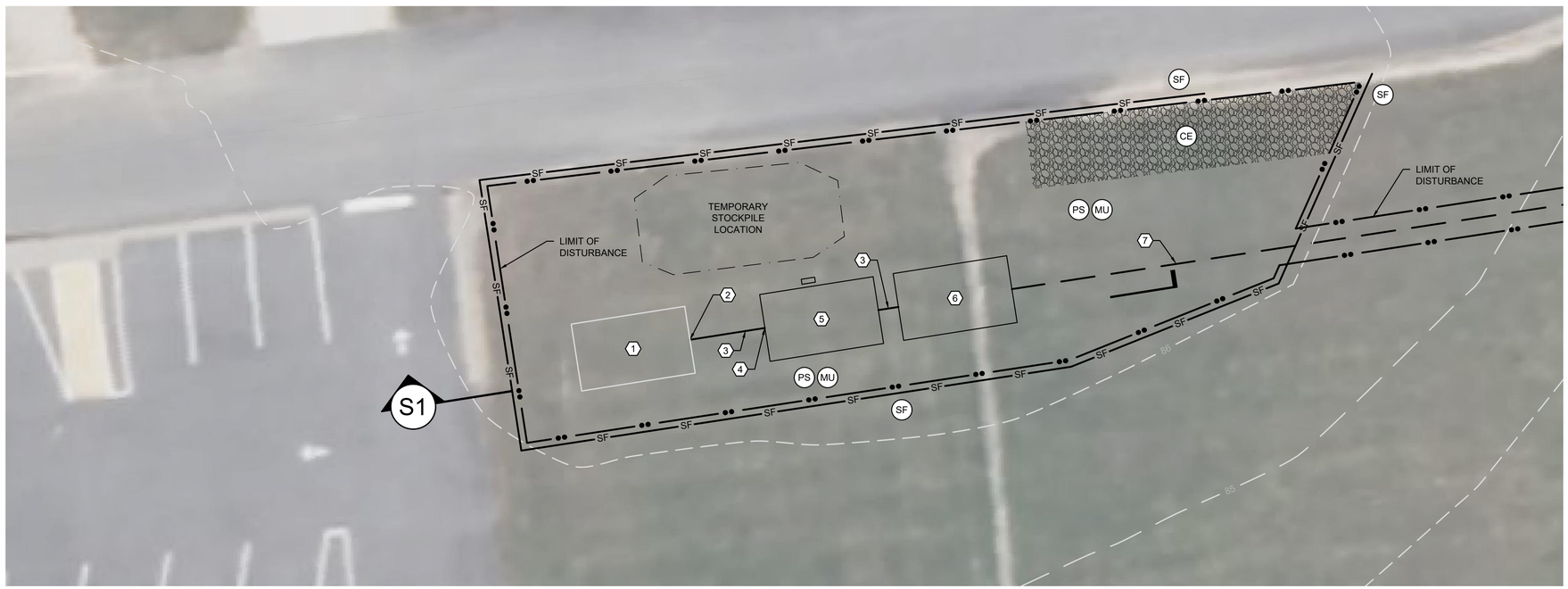


## 1 EQUALIZATION TANK SYSTEM PLAN AND SECTION

SCALE: 1" = 10'

0 10' 20'

N

## SHEET KEY NOTES

1. EXISTING DRAIN FIELD PUMP STATION AND WET WELL.
2. CORE DRILL EXISTING DRAIN FIELD PUMP STATION WETWELL 6" ABOVE FINISHED FLOOR. UTILIZE A MECHANICALLY INSERTED BOOT STYLE RUBBER CONNECTOR.
3. 8" PVC GRAVITY SEWER.
4. 8" INVERT TO BE 6" ABOVE FINISHED FLOOR OF NEW STRUCTURE..
5. 9,000 GAL PRECAST EQ TANK/WETWELL NO. 1, SEE D1/D-102.
6. 9,000 GAL PRECAST EQ TANK/WETWELL NO. 2, SEE D1/D-102.
7. 2" HDPE FORCE MAIN. SEE C-101 FOR CONTINUATION.
8. CONTRACTOR TO VERIFY (A) COVER DEPTH OVER TANK; AND (B) DEPTH TO FINISHED FLOOR OF EXISTING PUMP STATION WETWELL AND NOTIFY ENGINEER IF DIFFERENT THAN SHOWN.
9. HDPE MECHANICAL COMPRESSION FITTING.
10. PVC OR SS PIPE SUPPORTS EVERY 4 VERTICAL FEET.


MANGRUM
Consulting & Design
1500 Clayton Avenue, Lynchburg VA 24503
434.665.1515 Rob@MangrumConsulting.com


COMMONWEALTH OF VIRGINIA
CARL ROBERT LAWRENCE MANGRUM
Lic. No. 83450
11/22/2023
PROFESSIONAL ENGINEER

NORTHUMBERLAND HIGH & MIDDLE SCHOOLS

SANITARY TREATMENT MODIFICATIONS

OWNER:
NORTHUMBERLAND COUNTY
HEATHSVILLE, VIRGINIA

| MARK | DATE | DESCRIPTION |
|---|---|---|

PROJECT NO: 2346
DATE: 11/22/2023
DRAWN BY: MCT
CHECKED BY: CRLM
SHEET TITLE

EQUALIZATION TANK SYSTEM PLAN AND SECTION

D-102

SHEET 8 OF 15

X:\PROJ\TCS\2346_MCD-NORTHUMBERLAND\HS\CAD\2346D102.DWG PLOT: 11/21/2023 1:57 PM

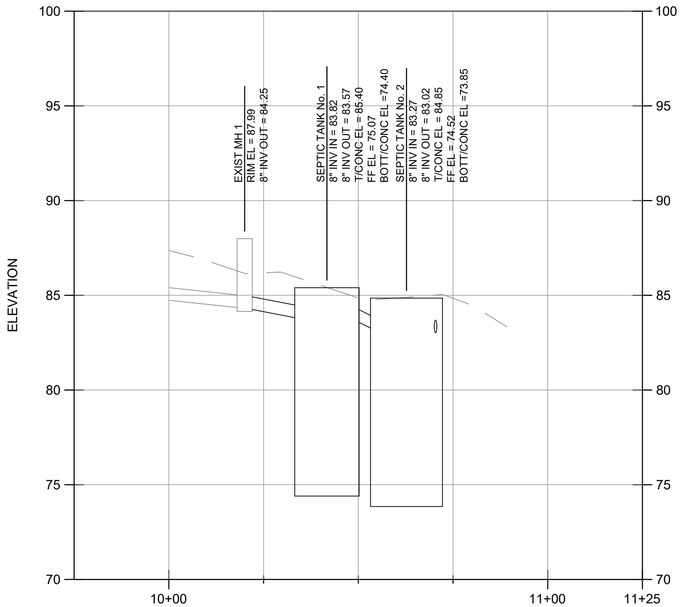


S1 SEPTIC TANK SECTION

SCALE: 1" = 20' HORIZ : 1" = 4' VERT

0 20' 40'

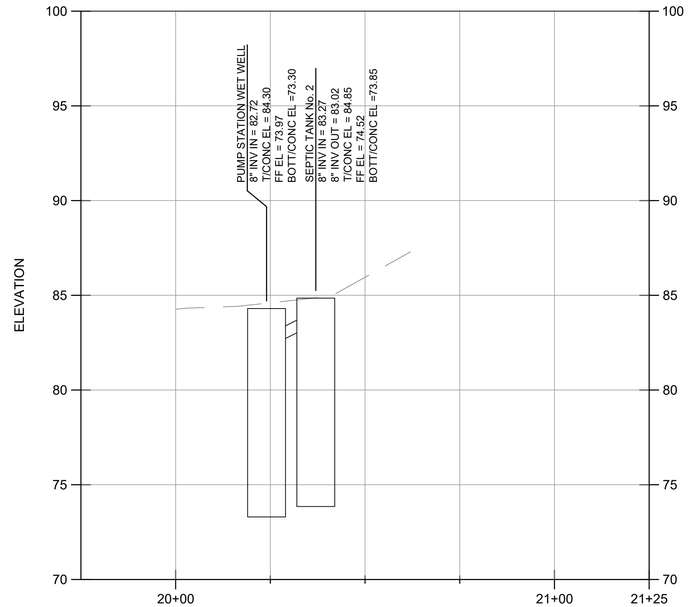


S2 SEPTIC TANK AND PUMP STATION SECTION

SCALE: 1" = 20' HORIZ : 1" = 4' VERT

0 20' 40'

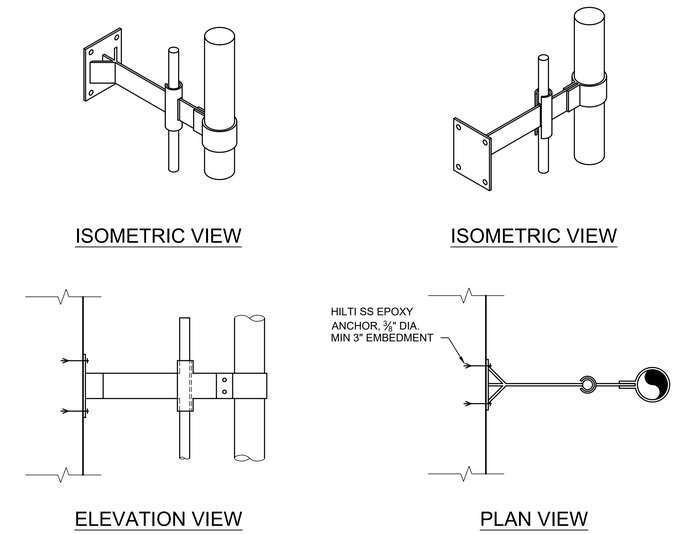


ALL ELEMENTS OF PUMP RAIL SUPPORT SYSTEM TO BE STAINLESS STEEL.

D3 PUMP RAIL SYSTEM DETAILS

N.T.S.

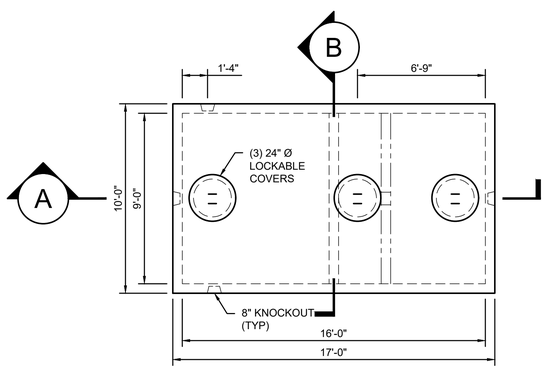


PLAN VIEW

NOTES FOR D2 AND D3:

1. CONCRETE: 5,000 PSI MIN. STRENGTH @ 28 DAYS.
2. STEEL REINFORCING - ASTM A-615, GRADE 60.
3. COVER TO SEEL - 1" MIN.
4. TANKS ARE DESIGNED TO MEET ASTM C858 AND ACI 318 WITH AASHTO HS-20 LOADING.
5. EARTH COVER - 0 TO 5 FEET MAX.
6. CONSTRUCTION JOINT - SEALED WITH 1" DIA. BUTYL RUBBER OR EQUAL.
7. SIZE OF INFLUENT/EFFLUENT PIPING PENETRATIONS SHALL BE AS SHOWN ON THE DRAWINGS. ALL INTERNAL PIPING SHALL MATCH THE INFLUENT/EFFLUENT PIPE SIZE SHOWN ON THE DRAWINGS.
8. PENETRATIONS FOR PIPE SIZES 4" AND LARGER SHALL HAVE A CAST-IN RUBBER BOOT STYLE CONNECTOR MEETING ASTM C923.
9. PENETRATIONS FOR PIPE SIZES SMALLER THAN 4" SHALL HAVE A MECHANICALLY INSTALLED RUBBER BOOT STYLE CONNECTOR MEETING ASTM C923. STRUCTURE TO BE CORE DRILLED.

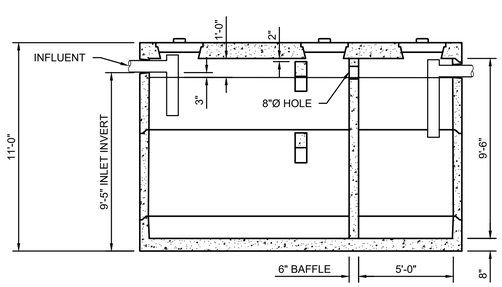


SECTION A

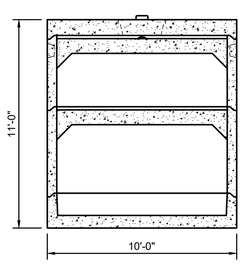


SECTION B

D1 9,000 GALLON CAPACITY SEPTIC TANK

N.T.S.

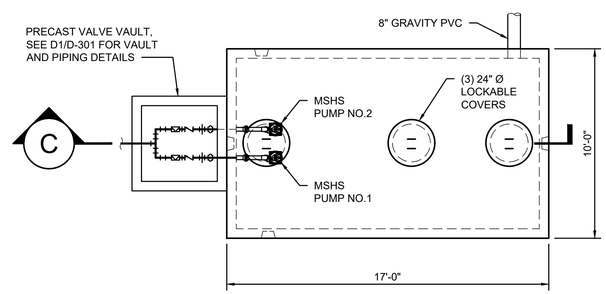


PLAN VIEW

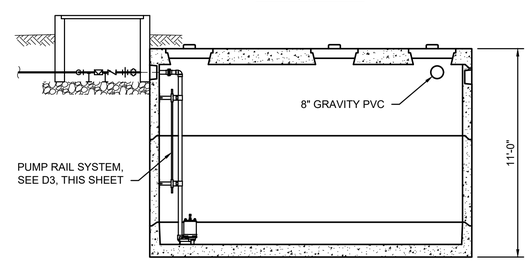


SECTION C

D2 9,000 GALLON SUBMERSIBLE PUMP STATION/WETWELL

N.T.S.

MANGRUM
Consulting & Design
1500 Clayton Avenue, Lynchburg VA 24503
434.665.1515 Rob@MangrumConsulting.com

COMMONWEALTH OF VIRGINIA
CARL ROBERT LAWRENCE MANGRUM
Lic. No. 53450
11/22/2023
PROFESSIONAL ENGINEER

NORTHUMBERLAND HIGH & MIDDLE SCHOOLS
SANITARY TREATMENT MODIFICATIONS
OWNER: NORTHUMBERLAND COUNTY HEATHSVILLE, VIRGINIA

| MARK | DATE | DESCRIPTION |
|---|---|---|

PROJECT NO: 2346
DATE: 11/22/2023
DRAWN BY: MCT
CHECKED BY: CRLM
SHEET TITLE

SEPTIC TANK AND PUMP STATION SECTIONS

D-301

SHEET 9 OF 15

X:\PROJ\TCS2346_MCD-NORTHUMBERLANDHS\CAD\2346D301.DWG PLOT: 11/21/2023 1:57 PM

SPECIFICATIONS:

1. PIPE BEDDING
   A. PIPE BEDDING MATERIAL: PIPE BEDDING SHALL BE GRANULAR MATERIAL CONSISTING OF SAND, GRAVEL OR CRUSHED STONE MEETING THE REQUIREMENTS OF ASTM DESIGNATION C33, GRADATION 67 (3/4 INCH TO NO. 4).
   B. FOUNDATION IN POOR SOIL: WHENEVER THE SOIL AT THE TRENCH SUB-GRADE ELEVATION IS SOFT, UNSTABLE, OR SATURATED WITH WATER, SUCH UNSUITABLE MATERIAL WILL BE REMOVED AND THE TRENCH SUB-GRADE STABILIZED WITH A GRANULAR STABILIZATION MATERIAL MAXIMUM SIZE OF GRANULAR MATERIAL SHALL BE TWO (2) INCHES. DEPTH OF STABILIZATION SHALL BE AS REQUIRED TO CONSTRUCT A FIRM SUB-GRADE FOR PIPE BEDDING MATERIAL.
   C. STONES AND ROCKS SHALL BE REMOVED AT LEAST 6 INCHES BELOW THE PIPE BOTTOM AND SELECTED BEDDING PROVIDED.

2. BACKFILL
   A. ALL MATERIAL USED FOR BACKFILL OF TRENCHES SHALL BE FREE OF EXCESSIVE AMOUNTS OF DELETERIOUS MATERIALS SUCH AS ALL ORGANIC MATTER, FROZEN CLODS AND STICKY MASSES OF CLAY AND GUMBO WHICH ARE DIFFICULT TO PROPERLY COMPACT. BACKFILL TO BE PLACED WITHIN 12 INCHES OF THE INSTALLED PIPE IN ANY DIRECTION SHALL NOT CONTAIN EARTH CLODS OR ROCK MATERIAL GREATER THAN ONE (1) INCH IN GREATEST DIMENSION. BACKFILL TO BE PLACED GREATER THAN 12 INCHES FROM THE TOP OF PIPE SHALL NOT CONTAIN EARTH CLODS OR ROCK MATERIAL GREATER THAN FOUR (4) INCHES IN GREATEST DIMENSION, MATERIAL AS SPECIFIED FOR PIPE BEDDING MAY BE SUBSTITUTED FOR BACKFILL MATERIAL DEFINED ABOVE FROM TOP OF PIPE BEDDING TO 12 INCHES ABOVE TOP OF PIPE.
   B. BACKFILL SHALL BE PLACED IN ACCORDANCE WITH LAYING CONDITION TYPE 4 AS ILLUSTRATED ON THE DETAILS DRAWING. BACKFILL SHALL BE DEPOSITED IN LAYERS OF A THICKNESS THAT WILL PERMIT COMPACTION TO A DENSITY AS SPECIFIED HEREINAFTER.
   C. THE LAYERS OF MATERIAL SHALL BE COMPACTED TO A DENSITY OF AT LEAST 90 PERCENT (90%) OF THE MAXIMUM DENSITY AS DETERMINED BY THE AASHO STANDARD TEST (AASHO DESIGNATION T99) WHEREVER THE PIPE IS INSTALLED IN OPEN FIELDS OR AREAS WHICH CARRY NO VEHICULAR TRAFFIC. THE TOP PORTION OF THE BACKFILL AREAS THAT ARE TO BE RE-SODDED SHALL BE COMPOSED OF TOPSOIL AT LEAST SIX (6) INCHES IN DEPTH AND CORRESPONDING TO THAT OF THE ADJOINING SODDED AREAS.
   D. THE LAYERS OF MATERIAL SHALL BE COMPACTED TO A DENSITY OF AT LEAST 95 PERCENT (95%) OF THE MAXIMUM DENSITY AS DETERMINED BY THE AASHO STANDARD TEST (AASHO DESIGNATION T99) FOR ALL PIPE PLACED WITHIN 10 LINEAR FEET OF A ANY ROADWAY AND UNDER ALL PAVEMENTS AND INDICATED FUTURE PAVEMENTS. PAVEMENT SHALL NOT BE RESTORED OVER TRENCHES UNTIL THE BACKFILL MATERIAL HAS BEEN TESTED AND DETERMINED AS SATISFACTORY ACCORDING TO PROJECT TESTING REQUIREMENTS.
   E. REMOVE AND DISPOSE OF ANY MATERIAL NOT USED FOR BACKFILL.
   F. BACKFILL MATERIALS SHALL BE PLACED EVENLY ADJACENT TO PIPING TO REQUIRED ELEVATIONS.
   G. EXISTING PAVEMENT WHICH HAS BEEN CUT, DAMAGED, OR REMOVED DURING CONSTRUCTION SHALL BE RESTORED TO EQUAL OR BETTER THAN ORIGINAL CONDITIONS. CONTRACTOR SHALL SAW CUT PERIMETER OF PATCH AND EXCAVATE EXISTING PAVEMENT SECTION TO SOUND BASE. RE-COMPACT NEW SUBGRADE, EXCAVATE TRIANGULAR PATCHES EXTENDING 12 INCHES INTO EXISTING SOUND PAVEMENT, TRACK COAT FACES OF PAVEMENT, AND ALLOW TO CURE PRIOR TO PAVEMENT. FILL EXCAVATIONS WITH DENSE GRADED HOT MIX ASPHALT MATCHING EXISTING PAVEMENT DEPTHS.

3. PIPE SHALL BE LAID TO A TRUE, UNIFORM LINE AND GRADE. THE CONTRACTOR SHALL BE RESPONSIBLE FOR ESTABLISHING AND MAINTAINING PIPELINE ALIGNMENT AS INDICATED ON THE DRAWINGS. DISTANCES SHALL BE MEASURED WITH A STEEL TAPE.

4. ALL BURIED PIPE (TO INCLUDE PROCESS, DRAIN AND CHEMICAL LINES) SHALL HAVE METALLIC BLUE WARNING TAPE AFFIXED TO THE TOP OF THE PIPE.

5. SEPARATION OF WATER AND SEWER LINES
   A. PARALLEL INSTALLATION:
      1. NORMAL CONDITIONS: WATER LINES SHALL BE AT LEAST 10 FEET HORIZONTALLY FROM A SEWER OR SEWER MANHOLE WHENEVER POSSIBLE, AND THE DISTANCE SHALL BE MEASURED EDGE TO EDGE.
      2. UNUSUAL CONDITIONS: WHEN LOCAL CONDITIONS PREVENT A HORIZONTAL SEPARATION OF AT LEAST 10 FEET, THE WATER LINE MAY BE CLOSER TO A SEWER OR SEWER MANHOLE PROVIDED THAT:
         a. THE BOTTOM OF THE WATER LINE IS AT LEAST 18 INCHES ABOVE THE TOP OF THE SEWER.
         b. WHERE THIS VERTICAL SEPARATION CANNOT BE OBTAINED, THE SEWER SHALL BE CONSTRUCTED OF AWWA APPROVED WATER PIPE PRESSURE-TESTED IN PLACE TO 50 PSI WITHOUT LEAKAGE PRIOR TO BACKFILLING. THE SEWER MANHOLE SHALL BE OF WATERTIGHT CONSTRUCTION AND TESTED IN PLACE.
   B. CROSSINGS:
      1. NORMAL CONDITIONS: WATER LINES CROSSING OVER SEWERS SHALL BE AT LEAST 18 INCHES BETWEEN THE BOTTOM OF THE WATER LINE AND THE TOP OF THE SEWER.
      2. UNUSUAL CONDITIONS: WHEN LOCAL CONDITIONS PREVENT A VERTICAL SEPARATION DESCRIBED IN CROSSING, NORMAL CONDITIONS, PARAGRAPH ABOVE, THE FOLLOWING CONSTRUCTION SHALL BE USED:
         a. SEWERS PASSING OVER OR UNDER WATER LINES SHALL BE CONSTRUCTED OF THE MATERIALS DESCRIBED IN PARALLEL INSTALLATION, UNUSUAL CONDITIONS, PARAGRAPH ABOVE.
         b. WATER LINES PASSING UNDER SEWERS SHALL, IN ADDITION, BE PROTECTED BY PROVIDING:
            i) A VERTICAL SEPARATION OF AT LEAST 18 INCHES BETWEEN THE BOTTOM OF THE SEWER AND THE TOP OF THE WATER LINE.
            ii) ADEQUATE STRUCTURE SUPPORT FOR THE SEWERS TO PREVENT EXCESSIVE DEFLECTION OF THE JOINTS AND SETTLING ON THE WATER LINE.
            ii) THAT THE LENGTH OF THE WATER LINE BE CENTERED AT THE POINT OF THE CROSSING SO THAT JOINTS SHALL BE EQUIDISTANT AND AS FAR AS POSSIBLE FROM THE SEWER.
            iv) WATER LINES SHALL NOT BE INSTALLED TO PASS THROUGH SEWER MANHOLES.

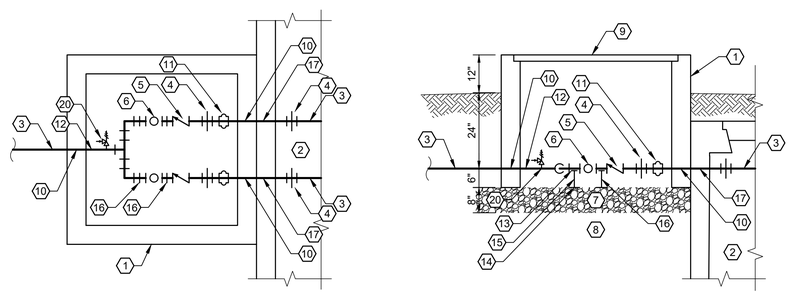


D1 VALVE VAULT DETAIL AND ELEVATION
SCALE: 1/2" = 1'-0"

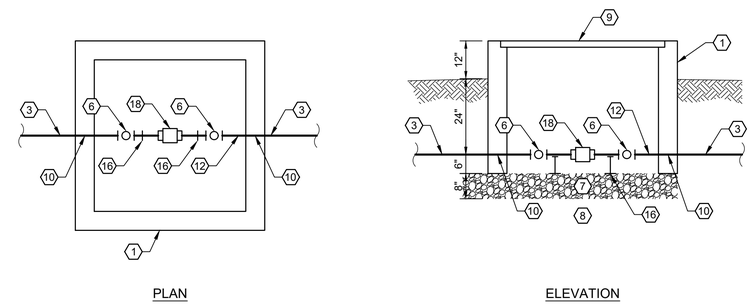


D2 FLOW METER VAULT DETAIL AND ELEVATION
SCALE: 1/2" = 1'-0"

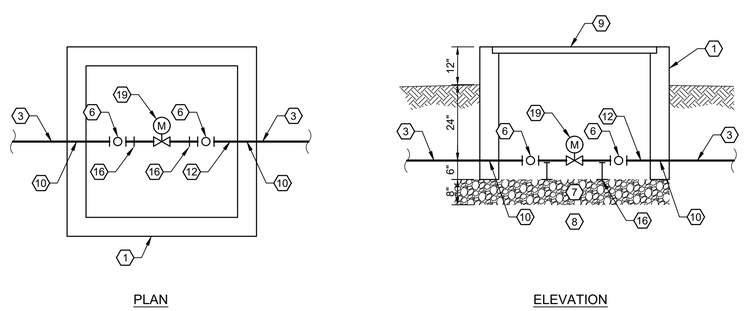


D3 CONTROL VALVE VAULT DETAIL AND ELEVATION
SCALE: 1/2" = 1'-0"

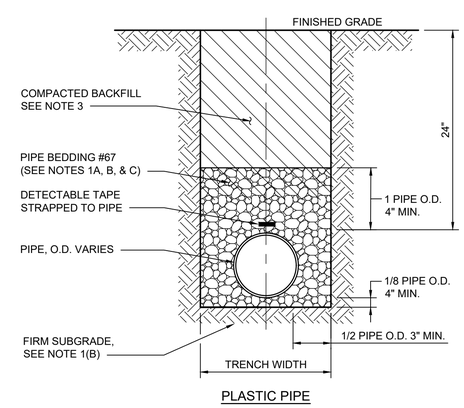


D4 PIPE BEDDING DETAIL
N.T.S.

## SHEET KEY NOTES

1. 4'x4' SQUARE PRECAST UTILITY VAULT SECTION MEETING ASTM WITH OPEN TOP AND OPEN BOTTOM.
2. 9,000 GALLON WETWELL.
3. 2" CPVC SCH. 40 PIPE. SEE D-002.
4. 2" CPVC TRU-UNION.
5. 2" COUNTER WEIGHTED CHECK VALVE, ANSI FLANGED. SEE D-002, TYP OF 2.
6. 2" CPVC BALL VALVE, TRU-UNION. SEE D-002.
7. #67 STONE.
8. COMPACTED SUBGRADE.
9. GRATING SHALL BE REMOVABLE FIBERGLASS NON-SLIP TYPE. GRATING SHALL BE AMERICAN PULTRUDED FIBERGLASS GRATING PT-20-33.
   RESIN = ISO
   COLOR = YELLOW
   GRATING SHALL BE CONTINUOUSLY PERIMETER SUPPORTED BY FIBERGLASS OR STAINLESS STEEL ANGLE MEMBERS. ALL HARDWARE ASSOCIATED WITH THE GRATING SYSTEM SHALL BE STAINLESS STEEL. TOP OF GRATING TO BE FLUSH WITH TOP OF STRUCTURE.
10. MECHANICALLY INSTALLED RUBBER BOOT STYLE CONNECTOR MEETING ASTM C923. STRUCTURE TO BE CORE DRILLED.
11. PROCO 240-AV/EE FLANGED SINGLE ARCH EXPANSION JOINT SETUP TO ALLOW EXPANSION AND CONTRACTION.
12. HEAT TRACE AND INSULATE (2 INCHES FIBERGLASS INSULATION WITH CORROSION RESISTANT HARDENED PROTECTIVE LAYER) ALL PIPING IN VAULT. HEAT TRACE VALVES ONLY.
13. CORROSION RESISTANT ADJUSTABLE PIPE SUPPORT TOP UNIT THREADED OR WELDED TO VERTICAL SUPPORT.
14. 3" MIN. O.D. BASE FLANGE THREADED OR WELDED TO VERTICAL SUPPORT PIPE.
15. 1½" SCH. 40 STEEL PIPE.
16. PIPE SUPPORT ASSEMBLY, TYP OF 4.
17. BOOT CONNECTOR, SEE D-002.
18. FLOW METER, SEE D-002.
19. ELECTRICALLY ACTUATED CONTROL VALVE. SEE D-002.
20. 1" PVC AIR RELEASE AND VACCUM VALVE.


MANGRUM
Consulting & Design
1500 Clayton Avenue, Lynchburg VA 24503
434.665.1515 Rob@MangrumConsulting.com


COMMONWEALTH OF VIRGINIA
CARL ROBERT LAWRENCE MANGRUM
Lic. No. 53450
11/22/2023
PROFESSIONAL ENGINEER

NORTHUMBERLAND HIGH & MIDDLE SCHOOLS
SANITARY TREATMENT MODIFICATIONS
OWNER: NORTHUMBERLAND COUNTY HEATHSVILLE, VIRGINIA

| MARK | DATE | DESCRIPTION |
|---|---|---|

PROJECT NO: 2346
DATE: 11/22/2023
DRAWN BY: MCT
CHECKED BY: CRLM
SHEET TITLE

DETAILS

D-501



X:\PROJ\TCS2346_MCD-NORTHUMBERLAND\HS\CAD\2346D501.DWG PLOT: 11/21/2023 1:57 PM

## GENERAL NOTES:

A. THE FOLLOWING NOTES APPLY TO THE ENTIRE PROJECT.

1. POWER, CONTROL AND NETWORK WIRING/CABE REQUIREMENTS:
   a. ALL WIRE INSTALLED UNDER THIS CONTRACT FOR 120V TO 600V POWER FEEDERS, DISTRIBUTION AND BRANCH CIRCUITS SHALL BE COPPER AND SHALL BE MINIMALLY RATED FOR 75 DEGREES C WET CONDITIONS.
   b. TSP CABLE FOR ANALOG SIGNALS SHALL BE BELDON 8760 MULTI-CONDUCTOR - SHIELDED TWISTED PAIR: 18 AWG STRANDED (16x30) TINNED COPPER CONDUCTORS, POLYETHYLENE INSULATION, TWISTED PAIR, OVERALL BELDFOIL® SHIELD (100% COVERAGE), 20 AWG STRANDED TINNED COPPER DRAIN WIRE, PVC JACKET AND 60 C RATED.
   c. CONDUCTORS CARRYING DIGITAL SIGNALS SHALL BE 14 AWG SOLID COPPER 60 C RATED WITH PVC JACKETING.
   d. ALL ETHERNET CABLES SHALL BE SHIELDED CAT6 60 C CABLE RATED FOR WET CONDITIONS, METALLIC AND NON-METALLIC CONDUIT USE.
   e. ALL FIBER OPTIC CABLE FURNISHED AND INSTALLED SHALL MEET THE FOLLOWING:
   i. 6 STRAND, MULTIMODE, 50/125 10GB, OM4, DISTRIBUTION CABLE, OFNP PLENUM RATED, INDOOR/OUTDOOR, TIGHT BUFFER, AQUA OUTER JACKET. OCC # DX006TAL39QP.
   ii. BURIED FIBER OPTIC CABLE SHALL BE IN 1.5" SCH 80 PVC CONDUIT PAINTED ORANGE BURIED AT LEAST 12 INCHES BELOW GRADE. LOCATOR TAPE WITH TRACER WIRE SHALL BE ATTACHED TO ALL BURIED CONDUIT CARRYING FIBER OPTIC.
   iii. INSTALLED INSIDE A BUILDING SHALL BE IN 1.5" ORANGE COLORED SCH. 80 PVC CONDUIT.
   iv. ATTACHED TO AN EXISTING STRUCTURE EXPOSED TO ELEMENTS SHALL BE IN A 1.5" ORANGE COLORED SCH. 80 PVC CONDUIT.
   v. ALL BENDS AND TRANSITIONS SHALL COMPLY WITH MANUFACTURER STATED MINIMUM BEND RADIUS AND TERMINATION REQUIREMENTS.

2. ALL EQUIPMENT SHALL BE INSTALLED IN ACCORDANCE WITH LOCAL CODES AND REGULATIONS.

3. ALL EQUIPMENT SHALL BE PROVIDED WITH LAMICOID NAMEPLATES (3/16" LETTERING MIN.). PLATES SHALL BE BLACK WITH WHITE LETTERS.

4. ALL ENCLOSURES AND CONTROL PANELS SHALL BE AS FOLLOWS UNLESS SPECIFICALLY NOTED OTHERWISE:
   a. UL LISTED FOR THE INTENDED PURPOSE. THIS INCLUDES UL508A FOR ALL "ENCLOSED INDUSTRIAL CONTROL PANELS".
   b. ENCLOSURES MOUNTED INSIDE A ROOM WITHOUT ANY PROCESS PIPING: UL TYPE-12 MINIMUM. ENCLOSURES MOUNTED INSIDE A ROOM THAT CONTAINS PROCESS PIPING: UL TYPE 3R MINIMUM. ENCLOSURES MOUNTED OUTSIDE: UL TYPE 4X MINIMUM.
   c. ALL ENCLOSURES SHALL BE PROVIDED WITH AMBIENT COMPENSATION AS REQUIRED BY THE INSTALLED EQUIPMENT: AIR CONDITIONER FOR ANY ENCLOSURE WITH A VFD THAT IS MOUNTED OUTSIDE; HEATER AND COOLING FANS FOR ALL ENCLOSURES.

5. BUILDING PLAN VIEWS (POWER DISTRIBUTION AND LIGHTS/RECEPTACLES):
   a. PROVIDE AND INSTALL ALL CONDUIT, WIRE AND SWITCHES AS REQUIRED FOR BUILDING LIGHTS.
   b. REFERENCE E-601 AND PANELBOARD SCHEDULES FOR CIRCUIT QUANTITIES.
   c. REFERENCE PLAN VIEWS FOR FIXTURE QUANTITIES, LOCATIONS AND DISTANCES.

6. REFERENCE SITE PLAN DRAWINGS FOR EQUIPMENT SITE LOCATIONS AND DISTANCES.

7. CONDUIT SPECIFICATION
   a. ALL ABOVE GRADE CONDUIT SHALL BE SCH 80 PVC UV RESISTANT, SOLVENT WELDED AND RATED FOR WET AND CORROSIVE ENVIRONMENTS UNLESS NOTED OTHERWISE.
   b. ALL CONDUIT INSIDE AN ENCLOSED BUILDING SHALL BE SCH 80 PVC UV RESISTANT, SOLVENT WELDED AND RATED FOR WET AND CORROSIVE ENVIRONMENTS UNLESS NOTED OTHERWISE.
   c. ALL BELOW GRADE CONDUIT NOT IN A DUCT BANK SHALL BE SCHEDULE 80 PVC SOLVENT WELDED AND RATED FOR WET AND CORROSIVE ENVIRONMENTS.
   d. PROVIDE DUCT BANKS AS SHOWN ON THE ELECTRICAL DRAWINGS.

8. THE LIST OF EQUIPMENT, TABULATIONS OF DATA, AND SCHEDULES APPEARING ON THE DRAWINGS ARE INCLUDED ONLY FOR THE ASSISTANCE AND GUIDANCE OF THE CONTRACTOR IN ARRIVING AT A MORE COMPLETE UNDERSTANDING OF THE INTENDED INSTALLATION. THEY ARE NOT INTENDED, NOR SHALL BE CONSTRUED, AS RELIEVING THE RESPONSIBILITY OF THE CONTRACTOR IN MAKING HIS OWN TAKEOFF AND PROVIDING ALL REQUIRED WORK AND COORDINATION AS REQUIRED BY THE CONSTRUCTION DOCUMENTS, SPECIFICATIONS AND ALL APPLICABLE CODES AND STANDARDS TO ACHIEVE A COMPLETE AND FUNCTIONING SYSTEM.

9. THE ELECTRICAL DRAWINGS ARE GENERALLY DIAGRAMMATIC. COORDINATE WORK WITH ALL TRADES PRIOR TO STARTING CONSTRUCTION SO THAT INTERFERENCE IS AVOIDED.

10. ELECTRICAL AND CONTROL WIRING CONDUIT ROUTING HAS NOT BEEN SHOWN ON THE DRAWINGS. CONDUIT ROUTING SHALL BE COORDINATED IN THE FIELD BY THE CONTRACTOR TO MEET SPECIFICATIONS, CODE REQUIREMENTS, AND TO PROVIDE A NEAT, WORKMAN LIKE, FULLY OPERATIONAL SYSTEM.

11. CONSOLIDATION OF INDIVIDUAL CONDUITS SHOWN ON THE DRAWINGS SHALL BE PERMITTED WITH THE FOLLOWING CONDITIONS: THE ELECTRICAL CONTRACTOR SHALL SIZE CONDUITS AND DE-RATE WIRE AS REQUIRED BY THE NEC AND FULLY DOCUMENT ALL CHANGES TO THE CIRCUITS AS SHOWN ON THE PLANS FOR RECORD. HOWEVER, AC POWER, DC POWER, ANALOG, AND DIGITAL SHALL NOT BE IN THE SAME CONDUIT AND EACH SHALL HAVE THEIR OWN DEDICATED CONDUITS.

12. WIRE CONDUIT SIZES AND QUANTITIES FOR FEEDERS AND BRANCH CIRCUITS WHICH ARE SHOWN ON ONE-LINE DIAGRAMS APPLY TO PLAN SHEETS.

13. UNLESS INDICATED, WIRING SHALL BE CONSIDERED #12, #12 G, IN 3/4" CONDUIT. CONDUIT SIZES AS SHOWN ARE BASED ON THWN INSULATED WIRE. THE CONTRACTOR SHALL VERIFY CONDUIT SIZE WILL MEET NEC CONDUIT FILL REQUIREMENTS IF USING WIRING WITH A DIFFERENT INSULATION TYPE OR THICKNESS OR WHEN CONSOLIDATING CONDUITS.

14. THE CONTRACTOR SHALL CONSIDER VOLTAGE DROP WHEN DETERMINING THE EXACT ROUTING OF BRANCH CIRCUIT AND FEEDER WIRING ADJUST WIRE AND CONDUIT SIZE AS NECESSARY TO COMPLY WITH THE NEC.

15. LIGHT FIXTURES SHALL BE PROVIDED COMPLETE WITH ALL ACCESSORIES AND MISCELLANEOUS HARDWARE REQUIRED FOR PROPER INSTALLATION.

16. PROVIDE FINAL CONNECTIONS TO ALL EQUIPMENT SHOWN ON THE DRAWINGS. DRAWINGS INDICATE THE APPROXIMATE LOCATION OF THE EQUIPMENT. COORDINATE INSTALLATION REQUIREMENTS AND EXACT LOCATION WITH THE TRADE PROVIDING THE EQUIPMENT.

17. ALL PLCS ON THIS PROJECT SHALL BY ALLEN BRADLEY CONTROL LOGIXS WITH AN ETHERNET PORT AND SHALL BE ETHERNET IP.

18. CONDUITS FOR INSTRUMENTATION AND CONTROL WIRING ARE NOT EXPLICITLY SHOWN ON THE CONTRACT DOCUMENTS. DRAWING E-602 PROVIDES AN ITEMIZATION OF ALL DIGITAL AND ANALOG SIGNALS FOR EACH INSTRUMENT AND INDICATES WHERE THE WIRING SHALL BE TERMINATED/LANDED. DIGITAL AND ANALOG SIGNALS SHALL BE IN SEPARATE CONDUITS. MINIMUM CONDUIT SIZE FOR DIGITAL SIGNALS FOR EACH INSTRUMENT SHALL BE ¾"C. THE MINIMUM SIZE FOR ANALOG SIGNALS FOR EACH INSTRUMENT SHALL BE ¾"C. SEE DRAWING E-602 NOTES A, B, C, D, AND E FOR ADDITIONAL INFORMATION.

**B. PROCESS CONTROL NARRATIVE:**

1. GENERAL:

   A. THE SUPPLIER OF PUMP STATION CONTROL PANEL SHALL BE RESPONSIBLE FOR PLC PROGRAMMING OF THE CONTROL PANEL TO ACHIEVE THE COMPLETE FUNCTIONALITY OF EACH RESPECTIVE SYSTEM IN ACCORDANCE WITH THE CONTRACT DOCUMENTS AND BELOW.

   B. SEE E-001 NOTE 17 FOR PLC REQUIREMENTS.

   C. EACH CONTROL PANEL SHALL BE FULLY ASSEMBLED AND PROGRAMMED PRIOR TO SHIPMENT TO THE PROJECT SITE.

2. PUMP STATION CONTROL PANEL:

   A. THE PUMPING SYSTEM SHALL OPERATE IN A DUTY/BACKUP PUMP CONFIGURATION. THE LEAD PUMP WILL BE AUTOMATICALLY ALTERNATED WITH EACH LEAD PUMP CYCLE. THE PUMP STATION SHALL HAVE ONE MODE OF AUTOMATIC OPERATION, FLOW CONTROL.

   B. MANUAL CONTROL WILL ALSO BE AVAILABLE VIA AN HOA SWITCH ON CONTROL PANEL COVER FOR EACH PUMP.

   C. ALL CONTROL OF THE EFFLUENT PUMP STATION SHALL BE FROM THE PLC CONTAINED WITHIN THE SUPPLIED PUMP STATION CONTROL PANEL. THE PLC SHALL BE ALLEN BRADLEY CONTROL LOGIX FOR COMPATIBILITY AND MAINTENANCE-RELIABILITY WITHIN THE OWNERS WASTEWATER SYSTEM (SEE E-001).

   D. FLOW CONTROL MODE SHALL BE ENGAGED AT THE HIM ON THE FRONT OF THE CONTROL PANEL AND SHALL ENTAIL THE PUMPING SYSTEM TO MAINTAIN AN OPERATOR ADJUSTABLE CONSTANT PUMPING RATE (GPM). INITIAL SETTING TO BE 14 GPM. AN ULTRASONIC FLOW METER (FLOW METER 1) WILL BE UTILIZED TO CONTROL THE PUMP SPEED VIA A PID LOOP THAT INCORPORATES A PANEL MOUNTED VFD (VARIABLE TORQUE) FOR EACH PUMP TO ACHIEVE THE DESIRED FLOW RATE. A LEVEL ELEMENT IN THE PUMP STATION WET WELL WILL BE UTILIZED TO CONTROL PUMP ON AND OFF LEVELS, OPERATOR ADJUSTABLE ON THE HMI. INITIAL PUMP ON SETTING TO BE 4.0 FT AFF AND INITIAL SETTING FOR PUMP OFF TO BE 2.0 FT AFF. FLOAT SWITCHES SHALL BE PROVIDED FOR BACKUP PURPOSES FOR LOW LEVEL CUT OFF AT 1.5 FT AFF AND FOR HIGH WATER ALARM AT 8.0 FT AFF. THE BACKUP PUMP SHALL BE TURNED ON IF A AHIGH WATER ALARM IS INITIATED.

   E. THE CONTROL PANEL SHALL HAVE TWO (2) FLOW METER DIGITAL DISPLAYS: ONE (1) FOR TOTAL FLOW; 1 FOR FLOW SENT TO THE EXISTING SBR TREATMENT SYSTEM CONTINUOUSLY CALCULATED BASED UPON THE DIFFERENCE BETWEEN FLOW METER 1 AND FLOW METER 2.

   F. THE CONTROL PANEL SHALL HAVE TWO (2) LEVEL METER DIGITAL DISPLAYS: ONE (1) FOR LEVEL IN THE WETWELL PUMP STATION LOCATED AT THE HIGH/SCHOOL MIDDLE SCHOOL LOCATION AND ONE (1) FOR THE WET WELL LEVEL LOCATED AT THE ELEMENTARY SCHOOL.

   G. THE PLC SHALL HAVE SUFFICIENT MEMORY TO RECORD ALL FLOW AND LEVEL VALUES FOR A PERIOD OF NOT LESS THAN 90 DAYS.

   H. THE PUMP STATION CONTROL SYSTEM SHALL ALSO OPERATE A SUBROUTINE CONTROL LOGIC FOR SENDING AN OPERATOR ADJUSTABLE RATE AND OPERATOR ADJUSTABLE TOTAL DAILY VOLUME OF FLOW TO THE EXISTING SBR TREATMENT SYSTEM. DURING PUMP OPERATION THE PLC SHALL UTILIZE THESE TWO OPERATOR ADJUSTABLE PARAMETERS TO SEND FLOW TO THE EXISTING SBR TREATMENT SYSTEM. THE PLC SHALL UTILIZE A PID LOOP TO CONTROL THE MODULATING CONTROL VALVE TO MEET BOTH PARAMETERS. FLOW TO THE SBR TREATMENT SYSTEM SHALL BE CONTINUOUSLY CALCULATED BASED UPON FLOW METER 1 MINUS FLOW METER 2 READINGS. THE INITIAL SETTINGS SHALL BE: MAXIMUM FLOW RATE TO THE SBR TREATMENT SYSTEM 5 GPM; THE MAXIMUM DAILY (MIDNIGHT TO MIDNIGHT) TO BE 900 GALLONS PER DAY. WHEN THE MAXIMUM DAILY FLOW VOLUME IS REACHED WITHIN AN DAILY PERIOD, THEN THE CONTROL VALVE SHALL CLOSE AND NOT ALLOW FLOW UNTIL THE NEXT DAY-PERIOD. IF THE MAXIMUM DAILY FLOW VOLUME IS NOT REACHED DURING A DAILY PERIOD, THE COUNTER SHALL STILL RESET AT THE START OF THE NEXT DAILY PERIOD.

   I. SEE E-601 FOR ADDITIONAL CONTROL PANEL FEATURES NOT CONTAINED HERE.

   J. SEE I/O SUMMARY TABLE FOR SIGNALS THAT SHALL BE SENT TO THE CONTROL PANEL PLC FOR CONTROL AND DISPLAY PURPOSES.

   K. CONTROL PANEL 3R; MOUNTED ON UNISTRUT AT LOCATION SHOWN ON THE DRAWINGS. FOLDABLE SUN/WEATHER SHIELDS SHALL BE PROVIDED FOR HMI AND FOR ALL DIGITAL DISPLAYS.

   L. A FLASHING RED BEACON MOUNTED ON TOP OF THE CONTROL PANEL SHALL BE ENERGIZED UPON ANY OF THE FOLLOWING:

   M. PUMP FAIL TO RUN ALARM

   N. HIGH WATER ALARM

   O. LOW WATER ALARM

   P. THE HMI SHALL ALSO DISPLAY THESE ALARMS AND A GENERAL ALARM SIGNAL SHALL BE SENT TO THE EXISTING SBR ALARM DIALER SYSTEM. AN ALARM ACKNOWLEDGE BUTTON SHALL BE LOCATED ON THE FRONT OF THE CONTROL PANEL AND SHALL SILENCE THESE ALARMS.

   Q. ALL OTHER ALARMS SHALL ONLY BE DISPLAYED AT THE HMI, NO BEACON AND NO ALARM DIALER.


MANGRUM
Consulting & Design
1500 Clayton Avenue, Lynchburg VA 24503
434.665.1515 Rob@MangrumConsulting.com


COMMONWEALTH OF VIRGINIA
CARL ROBERT LAWRENCE MANGRUM
Lic. No. 83450
11/22/2023
REGISTERED PROFESSIONAL ENGINEER

NORTHUMBERLAND HIGH & MIDDLE SCHOOLS

SANITARY TREATMENT MODIFICATIONS

OWNER:
NORTHUMBERLAND COUNTY
HEATHSVILLE, VIRGINIA

| MARK | DATE | DESCRIPTION |
|---|---|---|

| | |
|---|---|
| PROJECT NO: | 2346 |
| DATE: | 11/22/2023 |
| DRAWN BY: | MCT |
| CHECKED BY: | CRLM |

SHEET TITLE

ELECTRICAL NOTES

E-001

SHEET 11 OF 15


X:\PROJ\TCS2346_MCD-NORTHUMBERLANDHS\CAD\2346E001.DWG PLOT: 11/21/2023 1:57 PM

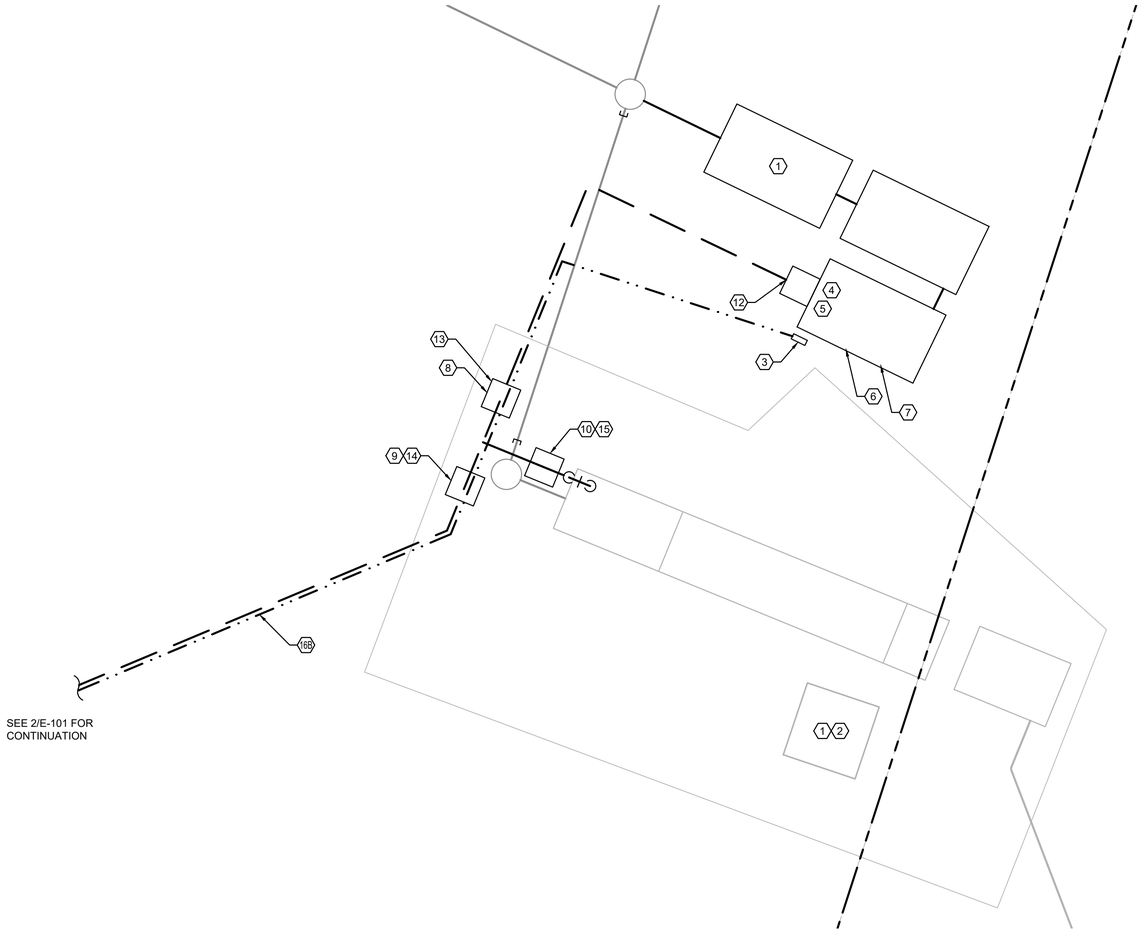


## 1 SEPTIC TANK AND PUMP STATION ELECTRICAL SITE PLAN

SCALE: 1" = 10'

0 10' 20'

N

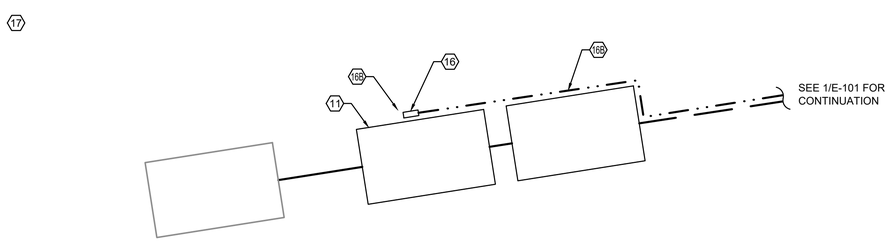


## 2 EQUALIZATION TANK SYSTEM ELECTRICAL SITE PLAN

SCALE: 1" = 10'

0 10' 20'

N

## SHEET KEY NOTES

1. EXISTING MAIN DISTRIBUTION PANEL BOARD (MDP) 480/277Y VAC 3P 4W 60 HZ 150A MAIN BREAKER, SURFACE MOUNTED.

2. EXISTING PANEL BOARD (PB) 208Y/120 VAC 3P 4W 60 HZ 60A MAIN BREAKER, SURFACE MOUNTED.

3. NEW CONTROL PANEL (CP):
   a. 1"C W/4 #6 & 1- #6 GND TO EXISTING MDP AND INSTALL NEW 50A 3P BREAKER IN AVAILABLE SPACE.
   b. 3/4"C W/3 #14 CONTROL WIRES TO EXISTING ALARM DIALER PANEL MOUNTED NEAR EX. MDP.

4. MSHS PUMP NO.1 (3.2 HP, 3P 460 VAC):
   a. PUMP CABLE (POWER AND CONTROL) TO VFD AND MINI-CAS MOUNTED WITHIN CP.

5. MSHS PUMP NO.2 (3.2 HP, 3P 460 VAC)
   a. PUMP CABLE (POWER AND CONTROL) TO VFD AND MINI-CAS MOUNTED WITHIN CP.

6. LEVEL ELEMENT IN WETWELL PUMP STATION AT HIGH/MIDDLE SCHOOL
   a. LEVEL ELEMENT CABLE TO REMOTE MOUNTED LIT MOUNTED ON UNISTRUT ADJACENT TO PUMP STATION WETWELL. LIT TO BE MOUNTED 50 INCHES ABOVE FINISHED GRADE.
   b. 3/4"C W/2 #12 & 1-#12 GND FROM REMOTE MOUNTED LIT TO CP.
   c. 3/4"C W/1 TSP FROM REMOTE MOUNTED LIT TO CP.
   d. 3/4"C W/1 #14 FROM REMOTE MOUNTED LIT TO CP.

7. FLOATS (HWL, LWL)
   a. HWL FLOAT CABLE TO CP.
   b. LWL FLOAT CABLE TO CP.

8. FLOW METER 1
   a. FLOW METER CABLE TO REMOTE MOUNTED FIT MOUNTED ON UNISTRUT ADJACENT TO FLOW METER VAULT. LIT TO BE MOUNTED 50 INCHES ABOVE FINISHED GRADE.
   b. 3/4"C W/2 #12 & 1-#12 GND FROM REMOTE MOUNTED FIT TO CP.
   c. 3/4"C W/1 TSP FROM REMOTE MOUNTED FIT TO CP.

9. FLOW METER 2
   a. FLOW METER CABLE TO REMOTE MOUNTED FIT MOUNTED ON UNISTRUT ADJACENT TO FLOW METER VAULT. LIT TO BE MOUNTED 50 INCHES ABOVE FINISHED GRADE.
   b. 3/4"C W/2 #12 & 1-#12 GND FROM REMOTE MOUNTED FIT TO CP.
   c. 3/4"C W/1 TSP FROM REMOTE MOUNTED FIT TO CP.

10. FLOW CONTROL VALVE
    a. 3/4"C W/2 #12 & 1-#12 GND TO CP.
    b. 3/4"C W/2 TSP TO CP.
    c. 3/4"C W/4 #14 TO CP.

11. LEVEL ELEMENT IN EQ/WETWELL AT ELEMENTARY SCHOOL
    a. LEVEL ELEMENT CABLE TO REMOTE MOUNTED LIT MOUNTED ON UNISTRUT ADJACENT TO EQ WETWELL. LIT TO BE MOUNTED 50 INCHES ABOVE FINISHED GRADE.
    b. 3/4"C W/2 #12 & 1-#12 GND FROM REMOTE MOUNTED LIT TO CP-2.
    c. 3/4"C W/1 TSP FROM REMOTE MOUNTED LIT TO CP-2.
    d. 3/4"C W/1 #14 FROM REMOTE MOUNTED LIT TO CP-2.

12. HEAT TRACE FOR PIPING IN VALVE VAULT: 3/4"C W/2 #12 & 1-#12 GND TO CP.

13. HEAT TRACE FOR PIPING IN FLOW METER 1 VAULT 3/4"C W/2 #12 & 1-#12 GND TO CP.

14. HEAT TRACE FOR PIPING IN FLOW METER 2 VAULT 3/4"C W/2 #12 & 1-#12 GND TO CP.

15. HEAT TRACE FOR PIPING IN CONTROL VALVE VAULT 3/4"C W/2 #12 & 1-#12 GND TO CP.

16. CONTROL PANEL-2 (CP-2)
    a. 3/4"C W/2 #10 & 1-#10 GND FROM CP-2 TO EXISTING PANEL LOCATED INSIDE ELEMENTARY SCHOOL BUILDING. INSTALL NEW 20A 120V BREAKER IN EXISTING 208Y PANEL IN AVAILABLE SPACE.
    b. 3/4"C W/1 FIBER CABLE FROM CP-2 (AT ELEMENTARY SCHOOL) TO CP (AT HIGH/MIDDLE SCHOOL).

17. EXISTING 208Y PANEL LOCATED INSIDE THE ELEMENTARY SCHOOL BUILDING. APPROXIMATELY 300 FT OF UNDER GROUND CONDUIT RUN REQUIRED OUTSIDE AND APPROXIMATELY 100 FT OF INDOOR CONDUIT RUN REQUIRED.

MANGRUM
Consulting & Design
1500 Clayton Avenue, Lynchburg VA 24503
434.665.1515 Rob@MangrumConsulting.com

COMMONWEALTH OF VIRGINIA
CARL ROBERT LAWRENCE MANGRUM
Lic. No. 53450
11/22/2023
PROFESSIONAL ENGINEER

NORTHUMBERLAND HIGH & MIDDLE SCHOOLS
SANITARY TREATMENT MODIFICATIONS
OWNER:
NORTHUMBERLAND COUNTY
HEATHSVILLE, VIRGINIA

| MARK | DATE | DESCRIPTION |
|---|---|---|

PROJECT NO: 2346
DATE: 11/22/2023
DRAWN BY: MCT
CHECKED BY: CRLM
SHEET TITLE

ELECTRICAL SITE PLAN

E-101

SHEET 12 OF 15

X:\PROJ\TCS\2346_MCD-NORTHUMBERLANDHS\CAD\2346E101.DWG PLOT: 11/21/2023 1:57 PM

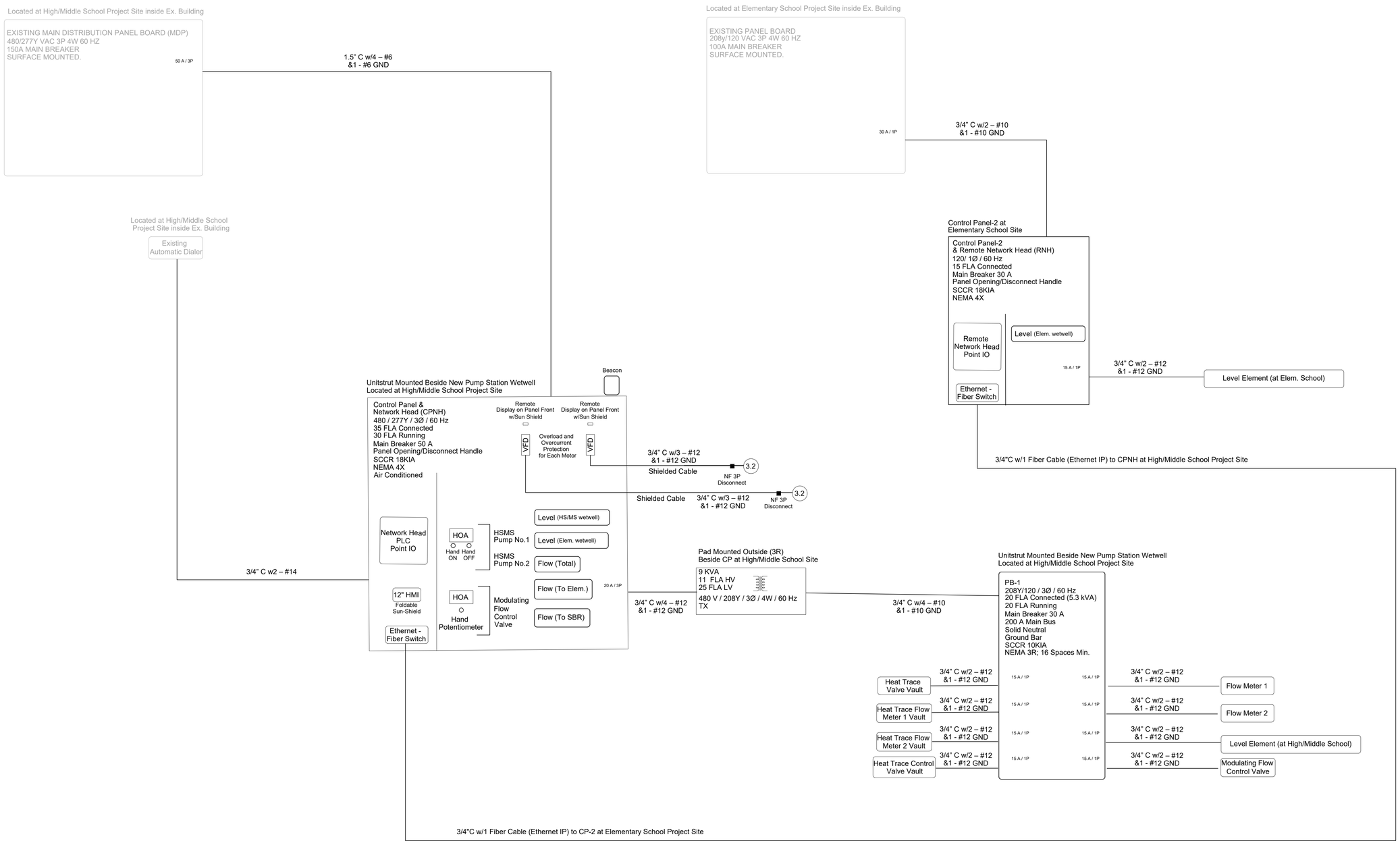


1 SINGLE LINE DIAGRAM

SCALE: NTS


MANGRUM
Consulting & Design
1500 Clayton Avenue, Lynchburg VA 24503
434.665.1515 Rob@MangrumConsulting.com


COMMONWEALTH OF VIRGINIA
CARL ROBERT LAWRENCE MANGRUM
Lic. No. 83450
11/22/2023
PROFESSIONAL ENGINEER

NORTHUMBERLAND HIGH & MIDDLE SCHOOLS

SANITARY TREATMENT MODIFICATIONS

OWNER:
NORTHUMBERLAND COUNTY
HEATHSVILLE, VIRGINIA

| MARK | DATE | DESCRIPTION |
|---|---|---|

| | |
|---|---|
| PROJECT NO: | 2346 |
| DATE: | 11/22/2023 |
| DRAWN BY: | MCT |
| CHECKED BY: | CRLM |

SHEET TITLE

SINGLE LINE

E-601

SHEET 13 OF 15

X:\PROJTCS\2346_MCD-NORTHUMBERLANDHS\CAD\2346E601.DWG PLOT: 11/21/2023 1:58 PM

General Notes:
A. Instruments to be furnished and installed by the General Contractor are itemized by general project location on this drawing.
B. Contractor shall furnish and install a dedicated power conduit for each instrument.
C. Contractor shall furnish and install a dedicated digital control signal conduit and cabling as required for each instrument to convey the type and quantity of I/O itemized on Table 3 Drawing E-603 for that instrument. 3/4"C minimum size.
D. Contractor shall furnish and install a dedicated analog control signal conduit and cabling as required for each instrument to convey the type and quantity of I/O itemized on Table 3 Drawing E-603 for that instrument. 3/4"C minimum size.
E. Contractor shall furnish and install a dedicated network conduit and cabling for each instrument as required per Table 3 Drawing E-603 for that instrument. 3/4"C minimum size.
F. Point IO shall be Allen Bradely/Rockwell Automation 1734 Point IO.
G. PLC shall be Allen Bradely Control Logixs per Drawing E-001.

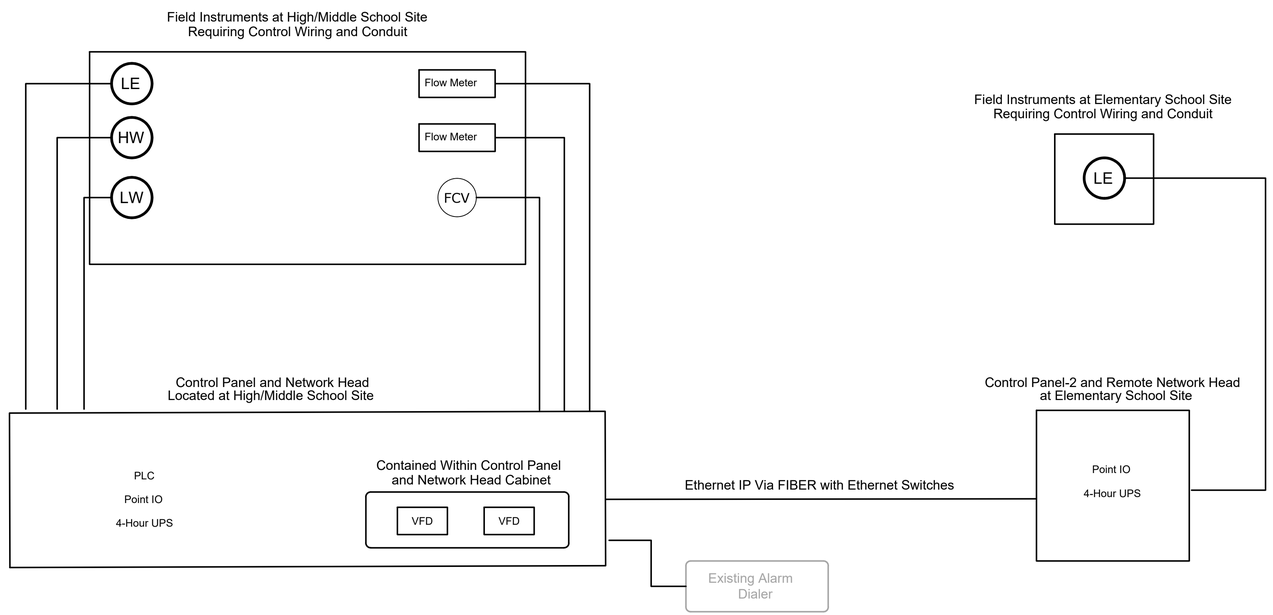


MANGRUM
Consulting & Design
1500 Clayton Avenue, Lynchburg VA 24503
434.665.1515 Rob@MangrumConsulting.com

COMMONWEALTH OF VIRGINIA
CARL ROBERT LAWRENCE MANGRUM
Lic. No. 83450
11/22/2023
PROFESSIONAL ENGINEER

NORTHUMBERLAND HIGH & MIDDLE SCHOOLS

SANITARY TREATMENT
MODIFICATIONS

OWNER:
NORTHUMBERLAND COUNTY
HEATHSVILLE, VIRGINIA

| MARK | DATE | DESCRIPTION |
|---|---|---|

| | |
|---|---|
| PROJECT NO: | 2346 |
| DATE: | 11/22/2023 |
| DRAWN BY: | MCT |
| CHECKED BY: | CRLM |

SHEET TITLE

CONTROL
SCHEMATIC

E-602

SHEET 14 OF 15

X:\PROJ\TCS\2346_MCD-NORTHUMBERLAND\HS\CAD\2346E602.DWG PLOT: 11/21/2023 1:58 PM

| Table 1 | | | | | | |
|---|---|---|---|---|---|---|
| Connected I/O Points & Ethernet Ports | | | | | | |
| General Location of IO | DO | DI | AO | AI | Ethernet IP | |
| IO Originating at High/Middle School | 2 | 8 | 1 | 4 | 2 | 17 |
| IO Originating at Elementary School | 0 | 1 | 0 | 1 | 0 | 2 |

| Table 2 | | | | | | |
|---|---|---|---|---|---|---|
| Minimum Installed I/O Points & Ethernet Ports | | | | | | |
| | DO | DI | AO | AI | Ethernet IP | |
| IO Originating at High/Middle School | 4 | 10 | 2 | 8 | 4 | 28 |
| IO Originating at Elementary School | 2 | 2 | 2 | 4 | 2 | 12 |

| Table 3 | | | | | | | |
|---|---|---|---|---|---|---|---|
| Itemization of Instrumentation Control Signals & PLC/SCADA Programming Requirements for New Equipment | | | | | | | |
| | | IO Originating at Middle/High School Location | | | | | IO Originating at Elementary School |
| Description of Signal & PLC/SCADA Programming Features | Signal Type | Level Element: Quantity 1 | Float Switches: Quantity 2 | Flow Meter: Quantity 2 | Flow Control Valve | Pump VFD: Quantity 2 | Level Element: Quantity 1 |
| Remote Start/Open | DO | | | | 1 | | |
| Remote Stop/Close | DO | | | | 1 | | |
| Local/Remote Control Status | DI | | | | 1 | | |
| Status Indication | DI | | | | 1 | | |
| General Alarm | DI | 1 | 2 | 2 | 1 | | 1 |
| Spare Digital Cable/Conductor(s) | | | | | | | |
| Speed Control or Position Control | AO | | | | 1 | | |
| Feed Back on Speed or Position Inidication | AI | | | | 1 | | |
| Instrument Reading(s) | AI | 1 | | 2 | | | 1 |
| Spare Analog Cable(s) | | | | | | | |
| Ethernet Cable (Ethernet IP) | Network | | | | | 2 | |


MANGRUM
Consulting & Design
1500 Clayton Avenue, Lynchburg VA 24503
434.665.1515 Rob@MangrumConsulting.com


COMMONWEALTH OF VIRGINIA
CARL ROBERT LAWRENCE MANGRUM
LIC. NO. 83450
11/22/2023
PROFESSIONAL ENGINEER

NORTHUMBERLAND HIGH & MIDDLE SCHOOLS

SANITARY TREATMENT MODIFICATIONS

OWNER:
NORTHUMBERLAND COUNTY
HEATHSVILLE, VIRGINIA

| MARK | DATE | DESCRIPTION |
|---|---|---|

PROJECT NO: 2346
DATE: 11/22/2023
DRAWN BY: MCT
CHECKED BY: CRLM
SHEET TITLE

I/O SUMMARY

E-603

SHEET 15 OF 15

X:\PROJ\TCS2346_MCD-NORTHUMBERLANDHS\CAD\2346E603.DWG PLOT: 11/21/2023 1:58 PM